BQ25750: Standalone/I²C Controlled, 1- to 14-Cell Bidirectional Buck-Boost Battery Charge Controller with Direct Power Path Control

1 Features

- Wide input voltage operating range: 4.2 V to 70 V
- Wide battery voltage operating range: up-to 70 V with multi-chemistry support:
  - 1- to 14-cell Li-ion charge profile
  - 1- to 16-cell $LiFePO_4$ charge profile
- Synchronous buck-boost charge controller with NFET drivers
  - Adjustable switching frequency from 200 kHz to 600 kHz
  - Optional synchronization to external clock
  - Integrated loop compensation with soft start
  - Optional gate driver supply input for optimized efficiency
- Bidirectional converter operation (Reverse Mode) supporting USB-PD Extended Power Range (EPR)
  - Adjustable input voltage (VAC) regulation from 3.3 V to 65 V with 20-mV/step
  - Adjustable input current regulation (R_{AC_SNS}) from 400 mA to 20 A with 50-mA/step using 5-mΩ resistor
- Direct power path management for highest efficiency to power system
  - System power selection from adapter or battery
  - Dynamic power management
  - All N-channel FET drivers
- High accuracy
  - ±0.5% charge voltage regulation
  - ±3% charge current regulation
  - ±3% input current regulation
- I²C controlled for optimal system performance with resistor-programmable option
  - Hardware adjustable input and output current limits
- Integrated 16-bit ADC for voltage, current, and temperature monitoring
- Low battery quiescent current
- High safety integration
  - Adjustable input overvoltage and undervoltage protection
  - Battery overvoltage and overcurrent protection
  - Charging safety timer
  - Battery short protection
  - Thermal shutdown
- Status outputs
  - Adapter present status ($\overline{PG}$)
  - Charger operation status
- Package
  - 36-pin 5 mm × 6 mm QFN

2 Applications

- Cordless power and garden tools
- Solar backup charger
- Energy storage systems
- Drone
- Ultrasound
- X-ray systems
- Electronic hospital beds and bed control
- Multiparameter patient monitors

3 Description

The BQ25750 is a wide input voltage, switched-mode buck-boost Li-Ion, Li-polymer, or $LiFePO_4$ battery charge controller with direct power path control. The device offers high-efficiency battery charging over a wide voltage range with accurate charge current and charge voltage regulation, in addition to automatic charge preconditioning, termination, and charge status indication. The device integrates all the loop compensation for the buck-boost converter, thereby providing a high density solution with ease of use. In reverse mode, the device draws power from the battery and regulates the SYS terminal voltage.

Package Information

PART NUMBER	PACKAGE(1)	PACKAGE SIZE(2)	BODY SIZE (NOM)
BQ25750	RRV (VQFN 36)	6.0 mm × 5.0 mm	6.0 mm × 5.0 mm

(1) For all available packages, see Section 14.
(2) The package size (length × width) is a nominal value and includes pins, where applicable.

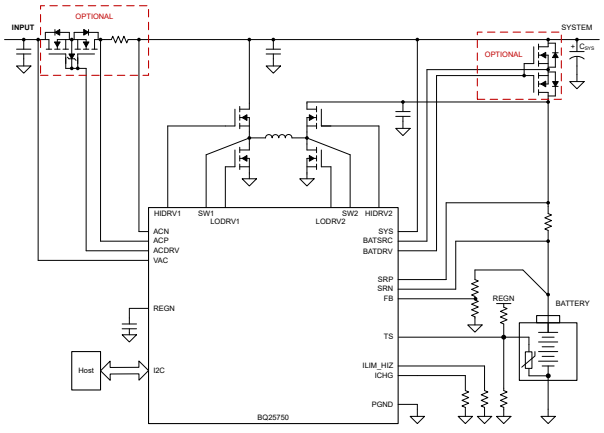

Simplified Schematic

An IMPORTANT NOTICE at the end of this data sheet addresses availability, warranty, changes, use in safety-critical applications, intellectual property matters and other important disclaimers. PRODUCTION DATA.

Table of Contents

1 Features....1
2 Applications....1
3 Description....1
4 Description (continued)....3
5 Device Comparison....4
6 Pin Configuration and Functions....5
7 Specifications....8
7.1 Absolute Maximum Ratings....8
7.2 ESD Ratings....8
7.3 Recommended Operating Conditions....8
7.4 Thermal Information....9
7.5 Electrical Characteristics....10
7.6 Timing Requirements....16
7.7 Typical Characteristics (BQ25750)....17
8 Detailed Description....20
8.1 Overview....20
8.2 Functional Block Diagram....21
8.3 Feature Description....22
8.4 Device Functional Modes....38
8.5 BQ25750 Registers....40
9 Application and Implementation....62
9.1 Application Information....62
9.2 Typical Applications....62
10 Power Supply Recommendations....73
11 Layout....74
11.1 Layout Guidelines....74
11.2 Layout Example....75
12 Device and Documentation Support....77
12.1 Device Support....77
12.2 Receiving Notification of Documentation Updates....77
12.3 Support Resources....77
12.4 Trademarks....77
12.5 Electrostatic Discharge Caution....77
12.6 Glossary....77
13 Revision History....77
14 Mechanical, Packaging, and Orderable Information....78

Copyright © 2023 Texas Instruments Incorporated

4 Description (continued)

Besides the I^2C host-controlled charging mode, the device also supports standalone charging mode via resistor programmable limits. Input current, charge current and charge voltage regulation targets can be set via the ILIM_HIZ, ICHG and FB pins, respectively.

The device has three status pins (STAT1, STAT2, and $\overline{PG}$) to indicate the charging status and input voltage status. These pins can be used to drive LEDs or communicate with a host processor. If needed, these pins can also be used as general purpose indicators and their status controlled directly by the I2C interface. The $\overline{INT}$ pin immediately notifies host when the device status changes, including faults.

The device also provides an analog-to-digital converter (ADC) for monitoring input current, charge current and input/battery/system/thermistor voltages.

The device comes with a 36-pin 5.0 mm × 6.0 mm QFN package with 0.5 mm pin pitch.

Copyright © 2023 Texas Instruments Incorporated

5 Device Comparison

PART NUMBER	BQ25750	BQ25756E	BQ25756
Key Feature	Li-Ion, LFP	Li-Ion, LFP	Li-Ion, LFP
Charger Topology	Buck-Boost	Buck-Boost	Buck-Boost
Power Topology	Direct Power-Path	Non Power-Path	Non Power-Path
I2C Address	0X6B	0X6A	0X6B
Default Charge Profile	Li-Ion (trickle, precharge, CC, CV)	Li-Ion (trickle, precharge, CC, CV)	Li-Ion (trickle, precharge, CC, CV)
Configuration	I2C + Standalone	I2C + Standalone	I2C + Standalone
Operating VIN	4.2V → 70V	4.2V → 36V	4.2V → 70V
Pin Count	36	36	36
Package	5X6 QFN	5X6 QFN	5X6 QFN
TS Pin Function	JEITA profile	JEITA profile	JEITA profile

Copyright © 2023 Texas Instruments Incorporated

6 Pin Configuration and Functions

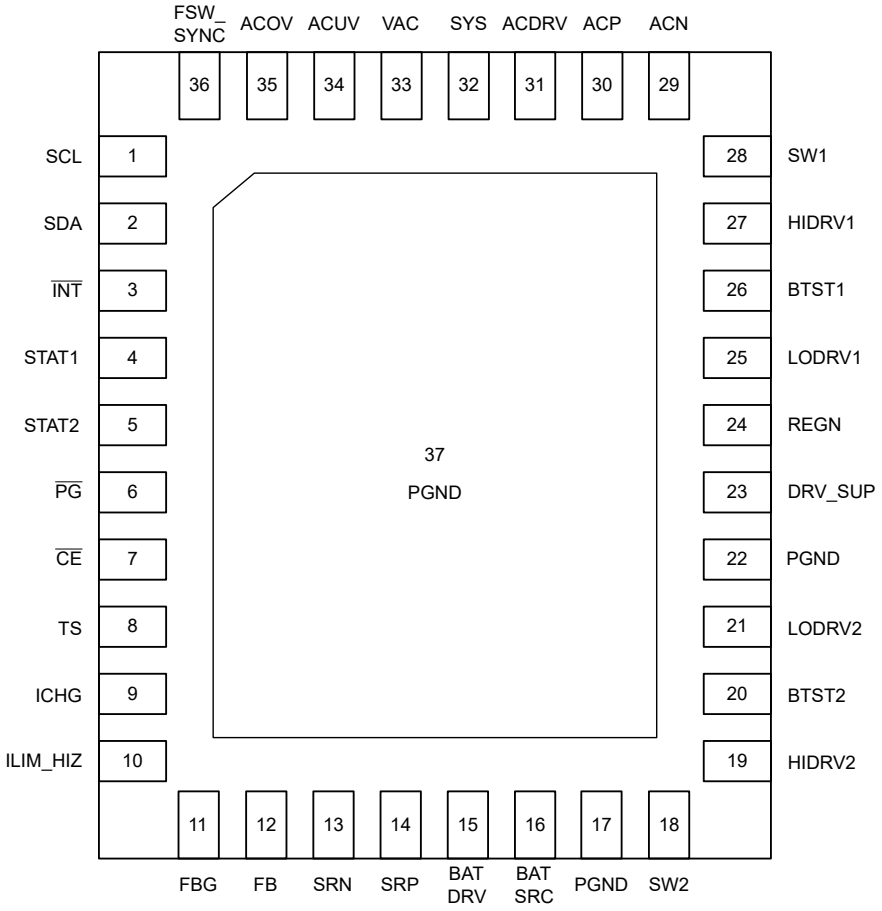

Figure 6-1. BQ25750, RRV Package 36-Pin VQFN Top View

Table 6-1. Pin Functions

PIN		I/O	DESCRIPTION
NAME	NO.		
SCL	1	I	**I²C Interface Clock –** Connect SCL to the logic rail through a 10-kΩ resistor.
SDA	2	IO	**I²C Interface Data –** Connect SDA to the logic rail through a 10-kΩ resistor.
$\overline{INT}$	3	O	**Open Drain Interrupt Output –** Connect the $\overline{INT}$ pin to a logic rail via 10-kΩ resistor. The $\overline{INT}$ pin sends an active low, 256-µs pulse to host to report the charger device status and faults.
STAT1	4	O	**Open Drain Charge Status 1 Output –** STAT1 and STAT2 indicate various charger operations, see Table 8-6. Connect to the pull up rail via 10-kΩ resistor. The STAT1, STAT2 pin functions can be disabled when DIS_STAT_PINS bit is set to 1. When disabled, this pin can be used as a general purpose indicator via the FORCE_STAT1_ON bit.
STAT2	5	O	**Open Drain Charge Status 2 Output –** STAT1 and STAT2 indicate various charger operations, see Table 8-6. Connect to the pull up rail via 10-kΩ resistor. The STAT1, STAT2 pin functions can be disabled when DIS_STAT_PINS bit is set to 1. When disabled, this pin can be used as a general purpose indicator via the FORCE_STAT2_ON bit.
$\overline{PG}$	6	O	**Open Drain Active Low Power Good Indicator –** Connect to the pull up rail via 10-kΩ resistor. LOW indicates a good input source if VAC is within the programmed ACUV / ACOV operating window. The $\overline{PG}$ pin function can be disabled when DIS_PG_PIN bit is set to 1. When disabled, this pin can be used as a general purpose indicator via the FORCE_STAT3_ON bit.
$\overline{CE}$	7	IO	**Active Low Charge Enable Pin –** Battery charging is enabled when EN_CHG bit is 1 and $\overline{CE}$ pin is LOW. $\overline{CE}$ pin must be pulled HIGH or LOW, do not leave floating. The $\overline{CE}$ pin function can be disabled when DIS_CE_PIN bit is set to 1. When disabled, this pin can be used as a general purpose indicator via the FORCE_STAT4_ON bit.

Copyright © 2023 Texas Instruments Incorporated

Table 6-1. Pin Functions (continued)

PIN		I/O	DESCRIPTION
NAME	NO.		
TS	8	I	**Temperature Qualification Voltage Input –** Connect a negative temperature coefficient thermistor. Program temperature window with a resistor divider from REGN to TS to PGND. Charge suspends when TS pin voltage is out of range. Recommend 103AT-2 10-kΩ thermistor.
ICHG	9	I	**Charge Current Limit Setting –** ICHG pin sets the maximum charge current, and can be used to monitor the charge current. A programming resistor to PGND is used to set the charge current limit as $I_{CHG} = K_{ICHG} / R_{ICHG}$. When the device is under charge current regulation, the voltage at ICHG pin is V_{REF_ICHG}. When ICHG pin voltage is less than V_{REF_ICHG}, the actual charge current can be calculated as: $IBAT = K_{ICHG} \times V_{ICHG} / (R_{ICHG} \times V_{REF_ICHG})$. The actual charge current limit is the lower of the limits set by ICHG pin or the ICHG_REG register bits. This pin function can be disabled when EN_ICHG_PIN bit is 0. If ICHG pin is not used, this pin should be pulled to PGND, do not leave floating.
ILIM_HIZ	10	I	**Input Current Limit Setting and HIZ Mode Control Pin –** ILIM_HIZ pin sets the maximum input current limit, can be used to monitor the input current and can be pulled HIGH to force device into HIZ mode. A programming resistor to PGND is used to set the input current limit as $I_{LIM} = K_{ILIM} / R_{ILIM}$. When the device is under input current regulation, the voltage at ILIM_HIZ pin is V_{REF_ILIM}. When ILIM_HIZ pin voltage is less than V_{REF_ILIM}, the actual input current can be calculated as: $IAC = K_{ILIM} \times V_{ILIM} / (R_{ILIM} \times V_{REF_ILIM})$. The actual input current limit is the lower of the limits set by ILIM_HIZ pin or the IAC_DPM register bits. This pin function can be disabled when EN_ILIM_HIZ_PIN bit is 0. If ILIM_HIZ pin is not used, this pin should be pulled to PGND, do not leave floating.
FBG	11	I	**Voltage Feedback Divider Return –** Connect to the bottom of battery feedback resistor. When charging, this pin is driven to PGND internally. When input voltage is outside of the ACUV / ACOV operating window, this pin is high-impedance, minimizing battery leakage current.
FB	12	I	**Charge Voltage Analog Feedback Adjustment –** Connect the output of a resistive voltage divider from the battery terminals to this node to adjust the output battery regulation voltage.
SRN	13	I	**Charge Current-Sense Resistor, Negative Input –** A 0.47-µF ceramic capacitor is placed from SRN to SRP to provide differential-mode filtering. An optional 0.1-µF ceramic capacitor is placed from the SRN pin to PGND for common-mode filtering.
SRP	14	I	**Charge Current-Sense Resistor, Positive Input –** A 0.47-µF ceramic capacitor is placed from SRN to SRP to provide differential-mode filtering. A 0.1-µF ceramic capacitor is placed from the SRP pin to PGND for common-mode filtering.
BATDRV	15	O	**N-Channel Battery FET Gate Drive –** Connect directly to the BATFET gate. Pin drives the gate with 10 V relative to BATSRC to turn on BATFET when the input voltage is outside of the ACUV / ACOV operating window. An optional capacitor from BATDRV to BATSRC can be used to slow down the turn on transition.
BATSRC	16	I	**N-Channel Battery FET Source –** Connect directly to the BATFETs common source.
PGND	17	I	Tie this pin directly to PGND.
SW2	18	P	**Boost Side Half Bridge Switching Node –** Connect to the source of boost HS FET and the drain of boost LS FET. Connect the inductor between SW1 and SW2.
HIDRV2	19	O	**Boost Side High-Side Gate Driver –** Connect to the boost high-side N-channel MOSFET gate.
BTST2	20	P	**Boost Side High-Side Power MOSFET Gate Driver Power Supply –** Connect a capacitor between BTST2 and SW2 to provide bias to the high-side MOSFET gate driver.
LODRV2	21	O	**Boost Side Low-Side Gate Driver –** Connect to the boost low-side N-channel MOSFET gate.
PGND	22	P	**Power Ground Return –** The high current ground connection for the low-side gate drivers.
DRV_SUP	23	P	**Charger Gate Drive Supply Input –** Voltage on this pin is used to drive the gates of buck-boost converter switching FET. Connect a 4.7-µF ceramic capacitor from DRV_SUP to power ground. REGN LDO voltage can be used as the gate driver supply for all switching FETs by connecting REGN to DRV_SUP pin. In high-voltage applications, it is possible to directly provide the DRV_SUP voltage with an external supply up to 12 V to achieve higher switching efficiency. See Section 8.3.3.2 for more details.
REGN	24	P	**Charger Internal Linear Regulator Output –** Connect a 4.7-µF ceramic capacitor from REGN to power ground. REGN LDO voltage can be used as the gate driver supply for all switching FETs by connecting REGN to DRV_SUP pin. In high-voltage applications, it is possible to directly provide the DRV_SUP voltage with an external supply up to 12 V to achieve higher switching efficiency. See Section 8.3.3.2 for more details.
LODRV1	25	O	**Buck Side Low-Side Gate Driver –** Connect to the buck low-side N-channel MOSFET gate.
BTST1	26	P	**Buck Side High-Side Power MOSFET Gate Driver Power Supply –** Connect a capacitor between BTST1 and SW1 to provide bias to the high-side MOSFET gate driver.

Copyright © 2023 Texas Instruments Incorporated

Table 6-1. Pin Functions (continued)

PIN		I/O	DESCRIPTION
NAME	NO.		
HIDRV1	27	O	**Buck Side High-Side Gate Driver –** Connect to the buck high-side N-channel MOSFET gate.
SW1	28	P	**Buck Side Half Bridge Switching Node –** Connect to the source of buck HS FET and the drain of buck LS FET. Connect the inductor between SW1 and SW2.
ACN	29	I	**Adapter Current-Sense Resistor, Negative Input –** A 0.47-µF ceramic capacitor is placed from ACN to ACP to provide differential-mode filtering. An optional 0.1-µF ceramic capacitor is placed from the ACN pin to PGND for common-mode filtering.
ACP	30	I	**Adapter Current-Sense Resistor, Positive Input –** A 0.47-µF ceramic capacitor is placed from ACN to ACP to provide differential-mode filtering. A 0.1-µF ceramic capacitor is placed from the ACP pin to PGND for common-mode filtering
ACDRV	31	O	**N-Channel Input FET Gate Drive –** Connect directly to the back-to-back input FETs (ACFETs) gates. Pin drives the gate with 10V to turn on ACFETs when the input voltage is inside of the ACUV / ACOV operating window. If input voltage is outside the valid operating window, this pin pulls to PGND to turn off the FETs. Connect a 15-V Zener diode from ACDRV to the common source of the ACFETs.
SYS	32	I	**System voltage sense point –** Sense point for system voltage. If VAC is outside of the ACUV / ACOV operating window, the BATFET will only turn on once the SYS voltage falls below battery voltage (ideal-diode turn on). When Reverse Mode is enabled, this pin voltage is regulated to VSYS_REV.
VAC	33	P	**Input Voltage Detection and Power –** VAC is the input bias to power the IC. Connect a 1-µF capacitor from pin to PGND.
ACUV	34	I	**Input Undervoltage Comparator –** Connect a resistor divider from VAC to PGND to program the undervoltage protection. When this pin falls below V_{REF_ACUV}, the device stops charging, disables the ACFETs and enables the BATFET. The hardware limit for input voltage regulation reference is V_{ACUV_DPM}. The actual input voltage regulation is the higher of the pin-programmed value and the VAC_DPM register value. If ACUV programming is not used, pull this pin to VAC, do not leave floating.
ACOV	35	I	**Input Overvoltage Comparator –** Connect a resistor divider from VAC to PGND to program the overvoltage protection. When this pin rises above V_{REF_ACOV}, the device stops charging, disables the ACFETs and enables the BATFET. If ACOV programming is not used, pull this pin to PGND, do not leave floating.
FSW_SYNC	36	I	**Switching Frequency and Synchronization Input –** An external resistor is connected to the FSW_SYNC pin and PGND to set the nominal switching frequency. This pin can also be used to synchronize the PWM controller to an external clock with 200-kHz to 600-kHz frequency.
Thermal Pad	37	-	**Exposed pad beneath the IC –** Always solder the thermal pad to the board, and have vias on the thermal pad plane star-connecting to PGND and ground plane for high-current power converter. It also serves as a thermal pad to dissipate the heat.

Copyright © 2023 Texas Instruments Incorporated

7 Specifications

7.1 Absolute Maximum Ratings

over operating free-air temperature range (unless otherwise noted)(1)

		MIN	MAX	UNIT
Voltage	VAC, ACUV, ACOV, ACP, ACN, SYS, ACDRV, BATDRV, BATSRC, SRP, SRN, FB, FBG	–0.3	85	V
Voltage	SW1, SW2	–2	85	V
Voltage	SW1, SW2 (40ns transient)	–4	85	V
Voltage	$\overline{PG}$	–0.3	40	V
Voltage	BATDRV with respect to BATSRC	–0.3	12	V
Voltage	BTST1, HIDRV1 with respect to SW1	–0.3	14	V
Voltage	BTST2, HIDRV2 with respect to SW2	–0.3	14	V
Voltage	DRV_SUP, LODRV1, LODRV2	–0.3	14	V
Voltage	ACP with respect to ACN, SRP with respect to SRN	–0.3	0.3	V
Voltage	$\overline{CE}$, FSW_SYNC, ICHG, ILIM_HIZ, $\overline{INT}$, REGN, SCL, SDA, MODE, STAT1, STAT2, TS	–0.3	6	V
Output Sink Current	$\overline{CE}$, $\overline{PG}$, STAT1, STAT2		5	mA
T_J	Junction temperature	–40	150	°C
T_{stg}	Storage temperature	–65	150	°C

(1) Stresses beyond those listed under *Absolute Maximum Rating* may cause permanent damage to the device. These are stress ratings only, which do not imply functional operation of the device at these or any other conditions beyond those indicated under *Recommended Operating Condition*. Exposure to absolute-maximum-rated conditions for extended periods may affect device reliability.

7.2 ESD Ratings

			VALUE	UNIT
$V_{(ESD)}$	Electrostatic discharge	Human body model (HBM), per ANSI/ESDA/JEDEC JS-001, all pins(1)	±2000	V
		Charged device model (CDM), per ANSI/ESDA/JEDEC JS-002, all pins(2)	±500	

(1) JEDEC document JEP155 states that 500-V HBM allows safe manufacturing with a standard ESD control process.
(2) JEDEC document JEP157 states that 250-V CDM allows safe manufacturing with a standard ESD control process.

7.3 Recommended Operating Conditions

over operating free-air temperature range (unless otherwise noted)

		MIN	NOM	MAX	UNIT
V_{AC}	Input voltage	4.2		70	V
V_{BAT}	Battery voltage	0		70	V
V_{DRV_SUP}	DRV_SUP pin direct drive voltage range	4.0		12	V
F_{SW}	Switching Frequency	200		600	kHz
T_J	Junction temperature	–40		125	°C
T_A	Ambient temperature	–40		105	°C
C_{VAC}	VAC capacitor	1			µF
C_{IN}	Buck-boost input capacitance (minimum value after derating)	160			µF
C_{OUT}	Buck-boost output capacitance (minimum value after derating)	160			µF
C_{REGN}	REGN capacitor (nominal value before derating)	4.7			µF
C_{DRV_SUP}	DRV_SUP capacitor (nominal value before derating)	4.7			µF

Copyright © 2023 Texas Instruments Incorporated

7.3 Recommended Operating Conditions (continued)

over operating free-air temperature range (unless otherwise noted)

		MIN	NOM	MAX	UNIT
L	Switched Inductor	2.2		15	µH
R_{DCR}	Inductor DC resistance	1.75		60	mΩ
R_{AC_SNS}	Input current sense resistor	0(1)	2	10	mΩ
R_{BAT_SNS}	Battery current sense resistor		5		mΩ
R_{ICHG}	ICHG programming pulldown resistor	0.0(2)		100	kΩ
R_{ILIM_HIZ}	ILIM_HIZ programming pulldown resistor	0.0(3)		50	kΩ

(1) When R_{AC_SNS} is 0mΩ, input current limit function is disabled
(2) When R_{ICHG} is pulled to GND, the hardware charge current limit is disabled, actual charge current is controlled by the ICHG_REG register setting
(3) When R_{ILIM_HIZ} is pulled to GND, the hardware input current limit is disabled, actual input current is controlled by the IAC_DPM register setting

7.4 Thermal Information

THERMAL METRIC(1)		BQ25750 RRV 36 PINS	UNIT
$R_{\theta JA}$	Junction-to-ambient thermal resistance (JEDEC(1))	29.4	°C/W
$R_{\theta JC(top)}$	Junction-to-case (top) thermal resistance	18.8	°C/W
$R_{\theta JB}$	Junction-to-board thermal resistance	9.9	°C/W
Ψ_{JT}	Junction-to-top characterization parameter	0.2	°C/W
Ψ_{JB}	Junction-to-board characterization parameter	9.8	°C/W
$R_{\theta JC(bot)}$	Junction-to-case (bottom) thermal resistance	2.5	°C/W

(1) For more information about traditional and new thermal metrics, see the Semiconductor and IC Package Thermal Metrics application report.

Copyright © 2023 Texas Instruments Incorporated

7.5 Electrical Characteristics

VAC = ACP = ACN = SYS = SRP = SRN = 28V, T_J = -40°C to +125°C, and T_J = 25°C for typical values (unless otherwise noted)

PARAMETER		TEST CONDITIONS	MIN	TYP	MAX	UNIT
QUIESCENT CURRENTS						
I_{SD_BAT}	Shutdown battery current with BATFET off (I_{SRN} + I_{SRP})	V_{BAT} = 28V, VAC = 0V, ADC_EN = 0, FORCE_BATFET_OFF = 1, T_J < 105 °C		10		µA
I_{Q_BAT}	Quiescent battery current with BATFET on (I_{SRN} + I_{SRP})	V_{BAT} = 28V, VAC = 0V, ADC_EN = 0, T_J < 105 °C		17		µA
		V_{BAT} = 28V, VAC = 0V, ADC_EN = 1, T_J < 105 °C		500	700	µA
I_{HIZ_VAC}	HIZ input current (I_{VAC})	EN_HIZ = 1		10	30	µA
I_{Q_VAC}	Quiescent input current (I_{VAC})	Not switching		0.75	1	mA
I_{Q_REV}	Quiescent battery current in Reverse mode (I_{SRN} + I_{SRP})	Not switching		0.75	1	mA
VAC / BAT POWER UP						
V_{VAC_OP}	VAC operating range		4.2		70	V
V_{VAC_OK}	VAC converter enable threshold	VAC rising, no battery	4.2			V
V_{VAC_OKZ}	VAC converter disable threshold	VAC falling, no battery			3.5	V
V_{REF_ACUV}	ACUV comparator threshold to enter VAC_UVP	V_{ACUV} falling	1.095	1.1	1.106	V
$V_{REF_ACUV_HYS}$	ACUV comparator threshold hysteresis	V_{ACUV} rising		50		mV
$V_{VAC_INT_OV}$	VAC internal threshold to enter VAC_OVP	IN rising	72	74	76	V
$V_{VAC_INT_OVZ}$	VAC internal thresholds to exit VAC_OVP	IN falling	69	71	73	V
V_{REF_ACOV}	ACOV comparator threshold to enter VAC_OVP	V_{ACOV} rising	1.184	1.2	1.206	V
$V_{REF_ACOV_HYS}$	ACOV comparator threshold hysteresis	V_{ACOV} falling		50		mV
V_{SRN_OK}	Battery voltage to enable BATFET	V_{SRN} rising, no input			3.1	V
V_{SRN_OKZ}	Battery voltage to disable BATFET	V_{SRN} falling, no input	2.15		2.5	V
CHARGE VOLTAGE REGULATION						
V_{VFB_RANGE}	Feedback voltage range		1.504		1.566	V
V_{VFB_NOM}	Nominal feedback voltage	VFB_REG = 0x10		1.536		V
V_{VFB_ACC}	Feedback voltage regulation accuracy	T_J = 0°C to 85°C	–0.5		0.5	%
		T_J = -40°C to 125°C	–0.7		0.7	%
R_{FBG}	FBG resistance to PGND	I_{FBG} = 1mA		33	55	Ω
FAST CHARGECURRENT REGULATION						
$I_{CHG_REG_RANGE}$	Charge current regulation range		0.4		20	A
$I_{CHG_REG_ACC}$	I^2C setting charge current regulation accuracy	R_{BAT_SNS} = 5mΩ, VBAT = 12V, 36V, 55V. ICHG_REG = 0x012C		15		A
			–3		3	%
		R_{BAT_SNS} = 5mΩ, VBAT = 12V, 36V, 55V. ICHG_REG = 0x0064		5		A
			–3		3	%
		R_{BAT_SNS} = 5mΩ, VBAT = 12V, 36V, 55V. ICHG_REG = 0x0028		2		A
			–5		5	%
K_{ICHG}	Hardware charge current limit set factor (Amperes of charge current per kΩ on ICHG pin)	R_{BAT_SNS} = 5mΩ, R_{ICHG} = 10kΩ, 5kΩ, and 3.33kΩ	48	50	52	A x kΩ

Copyright © 2023 Texas Instruments Incorporated

7.5 Electrical Characteristics (continued)

VAC = ACP = ACN = SYS = SRP = SRN = 28V, T_J = -40°C to +125°C, and T_J = 25°C for typical values (unless otherwise noted)

PARAMETER		TEST CONDITIONS	MIN	TYP	MAX	UNIT
V_{REF_ICHG}	ICHG pin voltage when ICHG pin is in regulation			2.0		V
PRE-CHARGE CURRENT REGULATION						
I_{PRECHG_RANGE}	Precharge current regulation range	V_{FB} < V_{BAT_LOWV} * V_{VFB_REG}	0.25		10	A
I_{PRECHG_ACC}	I²C setting precharge current accuracy	R_{BAT_SNS} = 5mΩ, V_{FB} < V_{BAT_LOWV} * V_{VFB_REG}. IPRECHG = 0x003C		3.0		A
			–4		4	%
		R_{BAT_SNS} = 5mΩ, V_{FB} < V_{BAT_LOWV} * V_{VFB_REG}. IPRECHG[1:0] = 0x0014		1.0		A
			–10		10	%
		R_{BAT_SNS} = 5mΩ, V_{FB} < V_{BAT_LOWV} * V_{VFB_REG}. IPRECHG[1:0] = 0x000A		0.50		A
			–30		30	%
CHARGE TERMINATION						
I_{TERM_RANGE}	Termination current range	V_{FB} = V_{VFB_REG}	0.25		10	A
I_{TERM_ACC}	Termination current accuracy	R_{BAT_SNS} = 5mΩ, VBAT = 12V, 36V, 55V . ITERM = 0x001E		1.5		A
			–7		7	%
		R_{BAT_SNS} = 5mΩ, VBAT = 12V, 36V, 55V. ITERM = 0x000A		0.50		A
			–20		20	%
		R_{BAT_SNS} = 5mΩ, VBAT = 12V, 36V, 55V. ITERM = 0x0005		0.250		A
			–50		50	%
BATTERY VOLTAGE COMPARATORS						
V_{BAT_SHORT}	Trickle charge to pre-charge transition	V_{SRN} rising	2.8	3	3.2	V
	Pre-charge to trickle charge transition	V_{SRN} falling	2.2	2.4	2.6	V
V_{BAT_LOWV}	Pre-charge to fast-charge transition	V_{FB} rising, as percentage of V_{FB_REG}, VBAT_LOWV[2:0] = 3	69.0	71.7	73.8	%
		V_{FB} rising, as percentage of V_{FB_REG}, VBAT_LOWV[2:0] = 2	64.3	66.7	69.0	%
		V_{FB} rising, as percentage of V_{FB_REG}, VBAT_LOWV[2:0] = 1	52	55	58	%
		V_{FB} rising, as percentage of V_{FB_REG}, VBAT_LOWV[2:0] = 0	27	30	33	%
$V_{BAT_LOWV_HYS}$	BAT_LOWV hysteresis			5		%
V_{RECHG}	Battery recharge threshold for Li-Ion and $LiFePO_4$	V_{FB} falling, as percentage of V_{FB_REG}, VRECHG[1:0] = 3		97.6		%
		V_{FB} falling, as percentage of V_{FB_REG}, VRECHG[1:0] = 2		95.2		%
		V_{FB} falling, as percentage of V_{FB_REG}, VRECHG[1:0] = 1		94.3		%
		V_{FB} falling, as percentage of V_{FB_REG}, VRECHG[1:0] = 0		93.0		%
INPUT CURRENT REGULATION						
$I_{IREG_DPM_ACC}$	I²C setting input current regulation accuracy in forward mode	R_{AC_SNS} = 2mΩ, IAC_DPM = 0x00A0		20		A
			–3		3	%
		R_{AC_SNS} = 2mΩ, IAC_DPM = 0x0050		10		A
			–4		4	%
		R_{AC_SNS} = 2mΩ, IAC_DPM = 0x0028		5.0		A
			–7		7	%

Copyright © 2023 Texas Instruments Incorporated

7.5 Electrical Characteristics (continued)

VAC = ACP = ACN = SYS = SRP = SRN = 28V, T_J = -40°C to +125°C, and T_J = 25°C for typical values (unless otherwise noted)

PARAMETER		TEST CONDITIONS	MIN	TYP	MAX	UNIT
K_{ILIM}	Hardware input current limit set factor (Amperes of input current per kΩ on ILIM_HIZ pin)	R_{AC_SNS} = 2mΩ, R_{ILIM} = 5kΩ, 2.5kΩ, and 1.67kΩ	48	50	52	A x kΩ
$V_{REF_ILIM_HIZ}$	ILIM_HIZ pin voltage when ILIM_HIZ pin is in regulation			2.0		V
$V_{IH_ILIM_HIZ}$	ILIM_HIZ input high threshold to enter HIZ mode	V_{ILIM_HIZ} rising	3.7			V
INPUT VOLTAGE REGULATION						
$V_{VREG_DPM_RANGE}$	Input voltage DPM regulation range		4.2		65	V
$V_{VREG_DPM_ACC}$	I^2C setting input voltage regulation accuracy	VAC_DPM = 0x076C		38		V
			–2		2	%
$V_{VREG_DPM_ACC}$	I^2C setting input voltage regulation accuracy in forward mode	VAC_DPM = 0x04E2		25		V
			–2		2	%
		VAC_DPM = 0x03B6		19		V
			–2		2	%
V_{ACUV_DPM}	ACUV pin voltage when in VDPM regulation		1.198	1.210	1.222	V
REVERSE MODE VOLTAGE REGULATION						
V_{REV_RANGE}	SYS Voltage regulation range in Reverse mode		3.3		65	V
V_{REV_ACC}	Voltage regulation accuracy in Reverse mode	VSYS_REV = 0x0960		48		V
			–2		2	%
		VSYS_REV = 0x0578		28		V
			–2		2	%
V_{REV_ACC}	VAC Voltage regulation accuracy in Reverse mode	VSYS_REV = 0x02EE		15		V
			–2		2	%
		VSYS_REV = 0x00FA		5		V
			–2		2	%
REVERSE MODE CURRENT REGULATION						
I_{IREV_ACC}	Input current regulation accuracy in Reverse mode	R_{AC_SNS} = 2mΩ, IAC_REV = 0x00A0		20		A
			–3.5		3.5	%
		R_{AC_SNS} = 2mΩ, IAC_REV = 0x0028		5.0		A
			–5.5		5.5	%
CHARGE MODE BATTERY-PACK NTC MONITOR						
V_{T1_RISE}	TS pin voltage rising T1 threshold, charge suspended above this voltage.	As Percentage to REGN, TS_T1=0°C w/ 103AT	72.75	73.25	73.85	%
V_{T1_FALL}	TS pin voltage falling T1 threshold, charge re-enabled below this voltage.	As Percentage to REGN, TS_T1=0°C w/ 103AT	71.5	72	72.5	%
V_{T2_RISE}	TS pin voltage rising T2 threshold, charge back to reduced ICHG above this voltage	As Percentage to REGN, TS_T2=10°C w/ 103AT	67.75	68.25	68.75	%
V_{T2_FALL}	TS pin voltage falling T2 threshold. Charge back to normal below this voltage	As Percentage to REGN, TS_T2=10°C w/ 103AT	66.45	66.95	67.45	%
V_{T3_FALL}	TS pin voltage falling T3 threshold, charge to ICHG and reduced V_{FB_REG} below this voltage.	As Percentage to REGN, TS_T3=45°C w/ 103AT	44.25	44.75	45.25	%

Copyright © 2023 Texas Instruments Incorporated

7.5 Electrical Characteristics (continued)

VAC = ACP = ACN = SYS = SRP = SRN = 28V, T_J = -40°C to +125°C, and T_J = 25°C for typical values (unless otherwise noted)

PARAMETER		TEST CONDITIONS	MIN	TYP	MAX	UNIT
V_{T3_RISE}	TS pin voltage rising T3 threshold. Charge back to normal above this voltage.	As Percentage to REGN, TS_T3=45°C w/ 103AT	45.55	46.05	46.55	%
V_{T5_FALL}	TS pin voltage falling T5 threshold, charge suspended below this voltage	As Percentage to REGN, TS_T5=60°C w/ 103AT	33.875	34.375	34.875	%
V_{T5_RISE}	TS pin voltage rising T5 threshold. Charge back to ICHG and reduced V_{FB_REG} above this voltage.	As Percentage to REGN, TS_T5=60°C w/ 103AT	35	35.5	36	%
REVERSE MODE BATTERY-PACK NTC MONITOR						
V_{BCOLD_RISE}	TS pin voltage rising TCOLD threshold. Reverse mode suspended above this voltage	As Percentage to REGN (BCOLD = –20°C w/ 103AT)	79.45	80.0	80.55	%
V_{BCOLD_RISE}	TS pin voltage rising TCOLD threshold. Reverse mode suspended above this voltage	As Percentage to REGN (BCOLD = –10°C w/ 103AT)	76.65	77.15	77.65	%
V_{BCOLD_FALL}	TCOLD comparator falling threshold.	As Percentage to REGN (–20°C w/ 103AT)	78.2	78.7	79.2	%
V_{BCOLD_FALL}	TCOLD comparator falling threshold.	As Percentage to REGN (–10°C w/ 103AT)	75.5	75.6	76.5	%
V_{BHOT_FALL}	TS pin voltage falling THOT threshold. Reverse mode suspends below this voltage	As Percentage to REGN, (BHOT = 55°C w/ 103AT)	37.2	37.7	38.2	%
V_{BHOT_FALL}	TS pin voltage falling THOT threshold. Reverse mode suspends below this voltage	As Percentage to REGN, (BHOT = 60°C w/ 103AT)	33.875	34.375	34.875	%
V_{BHOT_FALL}	TS pin voltage falling THOT threshold. Reverse mode suspends below this voltage	As Percentage to REGN, (BHOT 65°C w/ 103AT)	30.75	31.25	31.75	%
V_{BHOT_RISE}	TS pin voltage rising THOT threshold. Reverse mode allowed above this voltage	As Percentage to REGN, (BHOT = 55°C w/ 103AT)	38.5	39.0	39.95	%
V_{BHOT_RISE}	TS pin voltage rising THOT threshold. Reverse mode allowed above this voltage	As Percentage to REGN, (BHOT = 60°C w/ 103AT)	35	35.5	36	%
V_{BHOT_RISE}	TS pin voltage rising THOT threshold. Reverse mode allowed above this voltage	As Percentage to REGN, (BHOT 65°C w/ 103AT)	32.0	32.5	33.0	%
BATTERY CHARGER PROTECTION						
V_{BAT_OV}	Battery overvoltage threshold	V_{FB} rising, as percentage of V_{FB_REG}	102.5	104	105.5	%
V_{BAT_OVZ}	Battery overvoltage falling threshold	V_{FB} falling, as percentage of V_{FB_REG}	100.5	102	103.5	%
V_{ICHG_OC}	Battery charge over-current threshold	V_{SRP} - V_{SRN} rising	120		170	mV
THERMAL SHUTDOWN						
T_{SHUT}	Thermal shutdown rising threshold	Temperature increasing		150		°C
	Thermal shutdown falling threshold	Temperature decreasing		135		°C
REGN REGULATOR AND GATE DRIVE SUPPLY (DRV_SUP)						
V_{REGN}	REGN LDO output voltage	IREGN = 20mA	4.8	5	5.2	V
		VAC = 5V, IREGN = 20mA	4.35	4.6		V
I_{REGN}	REGN LDO current limit	VREGN = 4.5V	70			mA
V_{REGN_OK}	REGN OK threshold to allow switching	REGN rising		3.55		V
V_{DRV_UVPZ}	DRV_SUP under-voltage threshold to allow switching	DRV_SUP rising			3.7	V

Copyright © 2023 Texas Instruments Incorporated

7.5 Electrical Characteristics (continued)

VAC = ACP = ACN = SYS = SRP = SRN = 28V, T_J = -40°C to +125°C, and T_J = 25°C for typical values (unless otherwise noted)

PARAMETER		TEST CONDITIONS	MIN	TYP	MAX	UNIT
V_{DRV_OVP}	DRV_SUP over-voltage threshold to disable switching	DRV_SUP rising	12.8	13.2	13.6	V
POWER-PATH MANAGER						
V_{ACDRV_REG}	ACFET drive voltage	V_{ACDRV} - V_{VAC}, I_{ACDRV} = 10µA		10		V
I_{ACDRV_ON}	ACFET charge pump current limit	V_{ACDRV} - V_{VAC} = 5V		40		µA
I_{ACDRV_OFF}	ACFET turnoff current		3			mA
V_{BATDRV_REG}	BATFET drive voltage	V_{BATDRV} - V_{BATSRC}, VAC = 0V, I_{BATDRV} = 10µA		10		V
I_{BATDRV_REG}	BATFET charge pump current limit	V_{BATDRV} - V_{BATSRC} = 5V, VAC = 0V		40		µA
I_{BATDRV_OFF}	BATFET turnoff current			400		µA
I_{AC_LOAD}	VAC discharge load current		16			mA
I_{BAT_LOAD}	Battery (SRN) discharge load current		16			mA
SWITCHING FREQUENCY AND SYNC						
f_{SW}	Switching Frequency	R_{FSW_SYNC} = 133kΩ	212	250	288	kHz
		R_{FSW_SYNC} = 50kΩ	425	500	575	kHz
V_{IH_SYNC}	FSW_SYNC input high threshold		1.3			V
V_{IL_SYNC}	FSW_SYNC input low threshold				0.4	V
PW_{SYNC}	FSW_SYNC input pulse width		80			ns
PWM DRIVERS						
R_{HIDRV1_ON}	Buck side high-side turnon resistance	V_{BTST1} - V_{SW1} = 5V		3.4		Ω
R_{HIDRV1_OFF}	Buck side high-side turnoff resistance	V_{BTST1} - V_{SW1} = 5V		1.0		Ω
$V_{BTST1_REFRESH}$	Bootstrap refresh comparator threshold voltage	BTST1 falling, V_{BTST1} - V_{SW1} when low-side refresh pulse is requested	2.7	3.1	3.9	V
R_{LODRV1_ON}	Buck side low-side turnon resistance	VREGN = 5V		3.4		Ω
R_{LODRV1_OFF}	Buck side low-side turnoff resistance	VREGN = 5V		1.0		Ω
t_{DT1}	Buck side dead time, both edges			45		ns
R_{HIDRV2_ON}	Boost side high-side turnon resistance	V_{BTST2} - V_{SW2} = 5V		3.4		Ω
R_{HIDRV2_OFF}	Boost side high-side turnoff resistance	V_{BTST2} - V_{SW2} = 5V		1.0		Ω
$V_{BTST2_REFRESH}$	Bootstrap refresh comparator threshold voltage	BTST2 falling, V_{BTST2} - V_{SW2} when low-side refresh pulse is requested	2.7	3.1	3.9	V
R_{LODRV2_ON}	Boost side low-side turnon resistance	VREGN = 5V		3.4		Ω
R_{LODRV2_OFF}	Boost side low-side turnoff resistance	VREGN = 5V		1.0		Ω
t_{DT2}	Boost side dead time, both edges			45		ns
ANALOG-TO-DIGITAL CONVERTER (ADC)						
t_{ADC_CONV}	Conversion-time, each measurement	ADC_SAMPLE[1:0] = 00		24		ms
		ADC_SAMPLE[1:0] = 01		12		ms
		ADC_SAMPLE[1:0] = 10		6		ms
ADC_{RES}	Effective resolution	ADC_SAMPLE[1:0] = 00	14	15		bits
		ADC_SAMPLE[1:0] = 01	13	14		bits
		ADC_SAMPLE[1:0] = 10	12	13		bits
ADC MEASUREMENT RANGE AND LSB						
I_{AC_ADC}	Input current ADC reading (positive or negative)	Range with 2mΩ R_{AC_SNS}	–50000		50000	mA
		LSB with 2mΩ R_{AC_SNS}		2		mA

Copyright © 2023 Texas Instruments Incorporated

7.5 Electrical Characteristics (continued)

VAC = ACP = ACN = SYS = SRP = SRN = 28V, T_J = -40°C to +125°C, and T_J = 25°C for typical values (unless otherwise noted)

PARAMETER		TEST CONDITIONS	MIN	TYP	MAX	UNIT
I_{BAT_ADC}	Battery current ADC reading (positive or negative)	Range with 5mΩ R_{BAT_SNS}	–20000		20000	mA
		LSB with 5mΩ R_{BAT_SNS}		2		mA
V_{AC_ADC}	Input voltage ADC reading	Range	0		65534	mV
		LSB		2		mV
V_{BAT_ADC}	Battery voltage ADC reading	Range	0		65534	mV
		LSB		2		mV
V_{SYS_ADC}	System voltage ADC reading	Range	0		65534	mV
		LSB		2		mV
TS_{ADC}	TS voltage ADC reading, as percentage of REGN	Range	0		99.9	%
		LSB		0.098		%
V_{FB_ADC}	FB voltage ADC reading	Range	0		2047	mV
		LSB		1		mV
I²C INTERFACE (SCL, SDA)						
V_{IH}	Input high threshold level		1.3			V
V_{IL}	Input low threshold level				0.4	V
V_{OL}	Output low threshold level	Sink current = 5mA			0.4	V
I_{IN_BIAS}	High-level leakage current	Pull up rail 3.3V			1	µA
LOGIC I/O PIN ($\overline{CE}$, $\overline{PG}$, STAT1, STAT2)						
V_{IH}	Input high threshold level ($\overline{CE}$)		1.3			V
V_{OL}	Output low threshold level ($\overline{CE}$, $\overline{PG}$, STAT1, STAT2)	Sink current = 5mA			0.4	V
V_{IL}	Input low threshold level ($\overline{CE}$)				0.4	V
I_{OUT_BIAS}	High-level leakage current ($\overline{CE}$, $\overline{PG}$, STAT1, STAT2)	Pull up rail 3.3V			1	µA

Copyright © 2023 Texas Instruments Incorporated

7.6 Timing Requirements

		MIN	NOM	MAX	UNIT
VAC / BAT POWER UP					
t_{ACOV_DGL}	Enter ACOV deglitch time, ACOV rising		100		µs
t_{ACOVZ_DGL}	Exit ACOV deglitch time, ACOV falling		12		ms
t_{ACUV_DGL}	Enter ACUV deglitch time, ACUV falling		100		µs
t_{ACUVZ_DGL}	Exit ACUV deglitch time, ACUV rising		12		ms
BATTERY CHARGER					
t_{TERM_DGL}	Deglitch time for charge termination, V_{SRP} - V_{SRN} falling		220		ms
t_{RECHG_DGL}	Deglitch time for recharge threshold, VFB falling		200		ms
t_{PRECHG}	Pre-charge safety timer accuracy	1.7	2	2.3	hr
t_{SAFETY}	Fast-charge safety timer accuracy, CHG_TMR = 8hr	6.8	8	9.2	hr
t_{TOPOFF}	Top-off timer accuracy, TOPOFF_TMR = 30 min	25.5	30	34.5	min
t_{CV_TIMER}	CV timer accuracy, CV_TMR = 10hr	8.5	10	11.5	hr
BATTERY-PACK NTC MONITOR					
t_{TS_DGL}	Deglitch time for TS threshold crossing		25		ms
MPPT TIMERS					
t_{FULL_SWEEP}	Full Panel Sweep timer accuracy, FULL_SWEEP_TMR = 10 min	8.5	10	11.5	min
I^2C INTERFACE					
f_{SCL}	SCL clock frequency			1000	kHZ
DIGITAL CLOCK AND WATCHDOG					
t_{LP_WDT}	I^2C Watchdog reset time (EN_HIZ = 1, WATCHDOG[1:0] = 160s)	100	160		s
t_{WDT}	I^2C Watchdog reset time (EN_HIZ = 0, WATCHDOG[1:0] = 160s)	130	160		s

Copyright © 2023 Texas Instruments Incorporated

7.7 Typical Characteristics (BQ25750)

C_{VAC} = 160 µF, C_{OUT}= 160 µF, f_{SW} = 250 kHz, L = 10 µH, T_A = 25°C (unless otherwise specified)

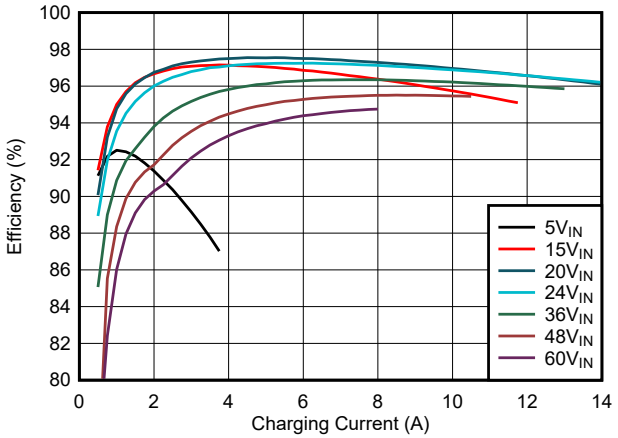

Figure 7-1. Charge Efficiency vs Charge Current (5s battery configuration)

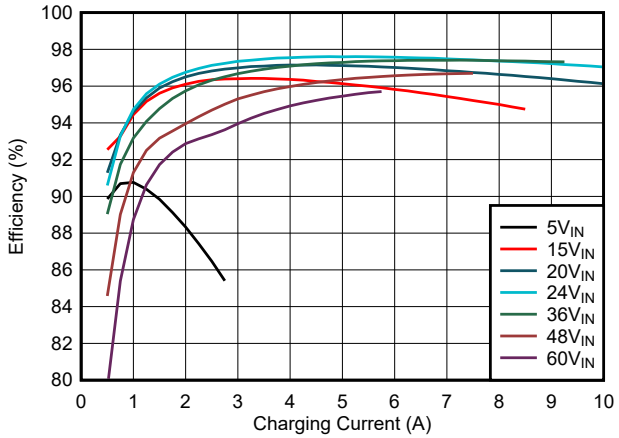

Figure 7-2. Charge Efficiency vs Charge Current (7s battery configuration)

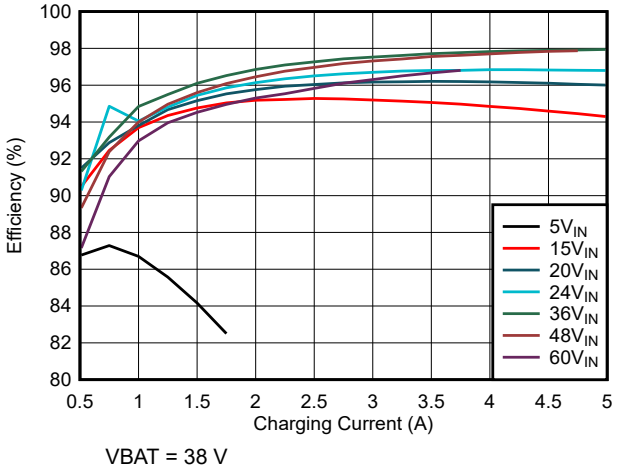

Figure 7-3. Charge Efficiency vs Charge Current (10s battery configuration)

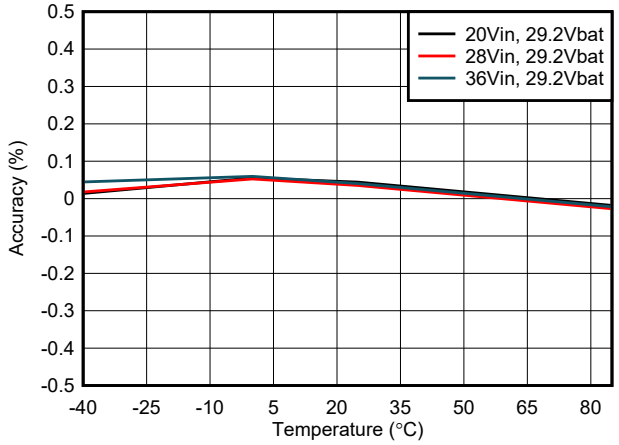

Figure 7-4. Charge Voltage Accuracy vs Temperature

7.7 Typical Characteristics (BQ25750) (continued)

C_{VAC} = 160 µF, C_{OUT}= 160 µF, f_{SW} = 250 kHz, L = 10 µH, T_A = 25°C (unless otherwise specified)

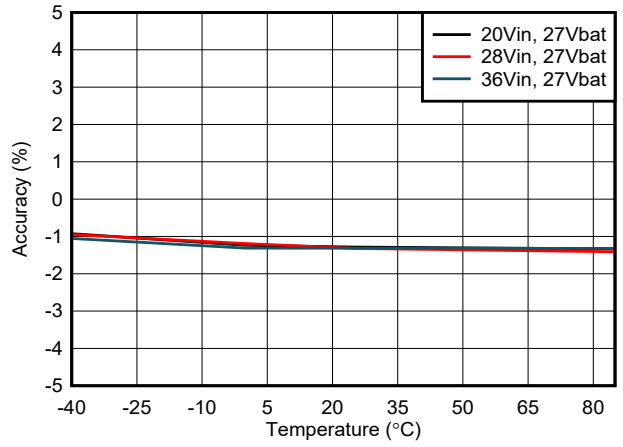

Figure 7-5. Charge Current Accuracy vs Temperature

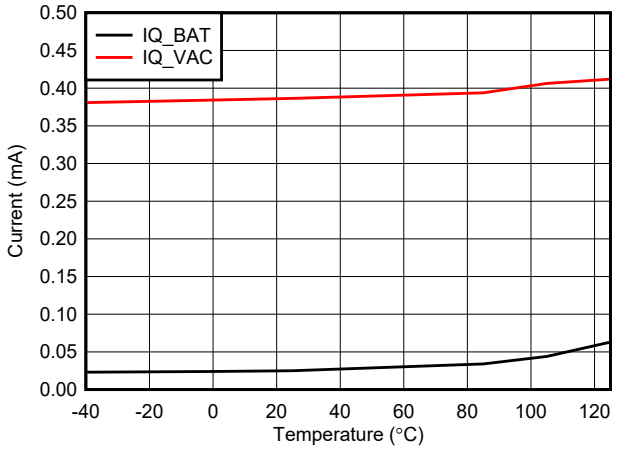

Figure 7-6. Battery and Input Quiescent Current vs Temperature with VBAT = 28 V

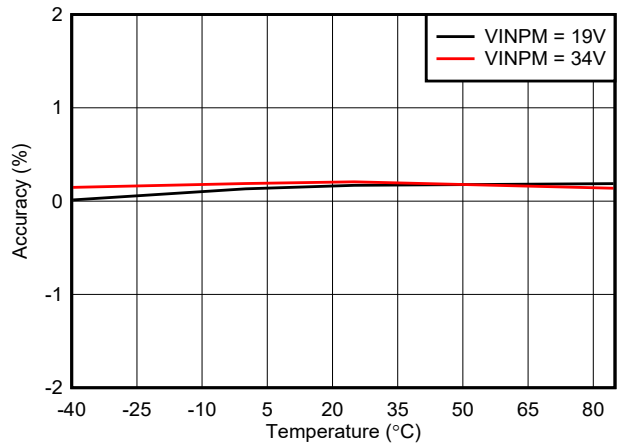

Figure 7-7. Input Voltage (VAC_DPM) Regulation Accuracy vs Temperature

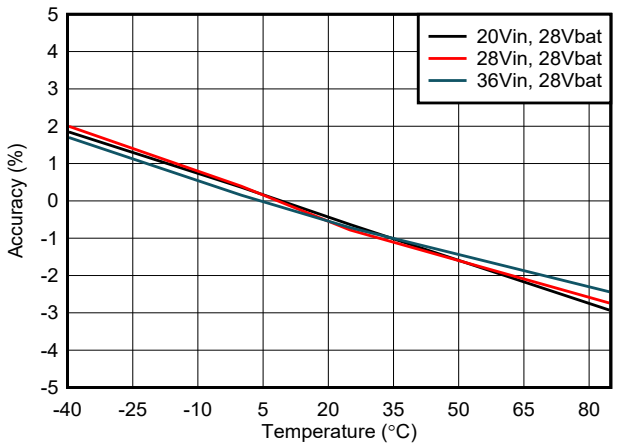

Figure 7-8. Input Current (IAC_DPM) Regulation Accuracy vs Temperature

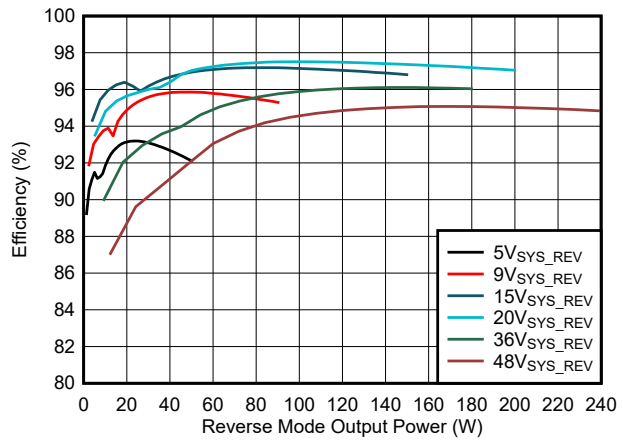

Figure 7-9. Reverse Mode Efficiency (5s battery configuration)

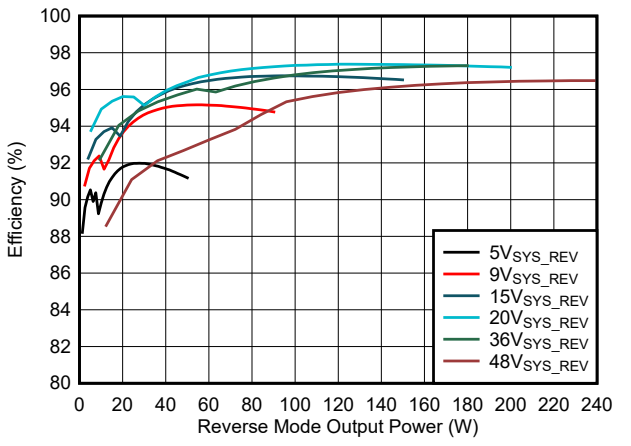

Figure 7-10. Reverse Mode Efficiency (7s battery configuration)

Copyright © 2023 Texas Instruments Incorporated

7.7 Typical Characteristics (BQ25750) (continued)

C_{VAC} = 160 µF, C_{OUT}= 160 µF, f_{SW} = 250 kHz, L = 10 µH, T_A = 25°C (unless otherwise specified)

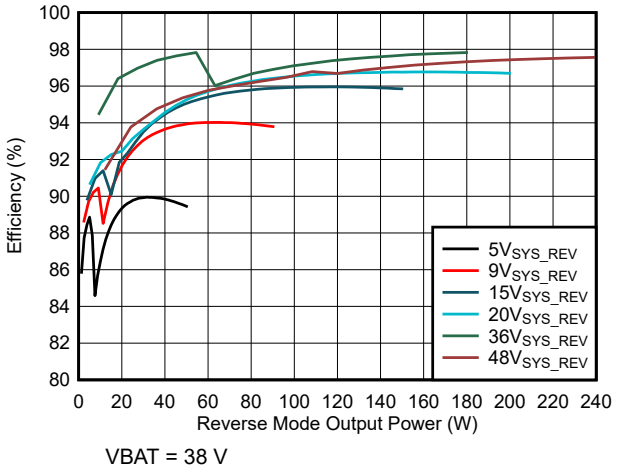

VBAT = 38 V

Figure 7-11. Reverse Mode Efficiency (10s battery configuration)

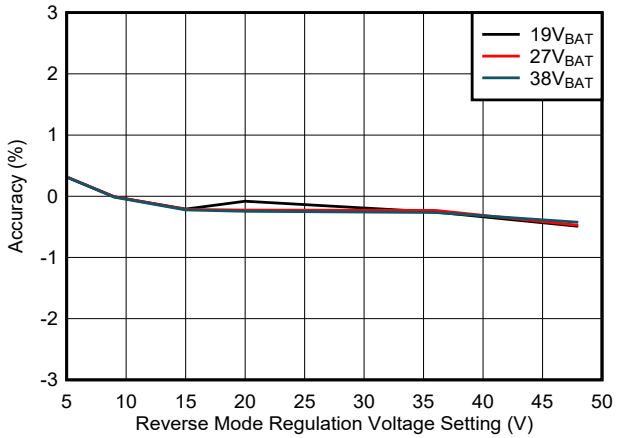

Figure 7-12. Reverse Mode Output Voltage Accuracy vs VAC_REV Setting

8 Detailed Description

8.1 Overview

The BQ25750 is a wide input voltage, Li-Ion, Li-polymer, and $LiFePO_4$ switched-mode buck-boost battery charge controller with direct power path control. The device offers high-efficiency battery charging over a wide voltage range with accurate and programmable charge current and charge voltage regulation, in addition to automatic charge preconditioning, termination, and charge status indication. The device integrates all the loop compensation and 5-V gate drivers for the buck-boost converter, thereby providing a high density solution with ease of use. The switching frequency of the device can be programmed or forced to follow an external clock frequency via the FSW_SYNC pin. While switching under light-load the device offers an optional Pulse Frequency Modulation (PFM) mode to increase efficiency. The charger has a digital state machine that advances the charger's states as the converter analog feedback loops hand off control to each other. It also manages the fault protection comparators. The loops regulate and comparators compare against reference values in the I^2C registers, unless clamped by external resistors.

Besides the I^2C host-controlled charging mode, the device also supports autonomous charging mode via resistor programmable limits. Input current, charge current and charge voltage regulation targets can be changed via the ILIM_HIZ, ICHG, and FB pins, respectively. The device can complete a charging cycle without any software intervention. Charging function is controlled via the $\overline{CE}$ pin.

For Li-Ion and $LiFePO_4$ chemistries, the device checks battery voltage and charges the battery in different phases accordingly: trickle charging, pre-charging, constant current (CC) charging and constant voltage (CV) charging. At the end of the charging cycle, the charger automatically terminates when the charge current is below the termination current limit in the constant voltage phase. When the full battery falls below the recharge threshold, the charger automatically starts a new charge cycle.

The input operating window is programmed via the ACUV and ACOV pins. When the input voltage is outside the programmed window, the device automatically stops the charger, transitions to power the system load from the battery, and the $\overline{PG}$ pin pulls HIGH. In the absence of an input source, the device can power the system load from battery through BATFET or via reverse power flow, discharging the battery through the buck-boost converter to generate a programmable, regulated voltage on system which is above or below the battery voltage.

The charger provides various safety features for battery charging and system operation, including battery temperature negative thermistor (NTC) monitoring, charge timers and over-voltage/over-current protections on battery and input. The thermal shutdown prevents charging when the junction temperature exceeds the T_{SHUT} limit.

The device has three status pins (STAT1, STAT2, and $\overline{PG}$) to indicate the charging status and input voltage status. These pins can be used to drive LEDs or communicate with a host processor. If needed, these pins can also be used as general purpose indicators and their status controlled directly by the I^2C interface. In addition, the $\overline{CE}$ pin can also be used as a general purpose indicator. The $\overline{INT}$ pin immediately notifies host when the device status changes, including faults.

The device also provides a 16-bit analog-to-digital converter (ADC) for monitoring input current, charge current and input/battery/system/thermistor voltages (IAC, IBAT, VAC, VBAT, VSYS, TS).

The device comes with a 36-pin 5-mm × 6-mm QFN package with 0.5-mm pin pitch.

Copyright © 2023 Texas Instruments Incorporated

8.2 Functional Block Diagram

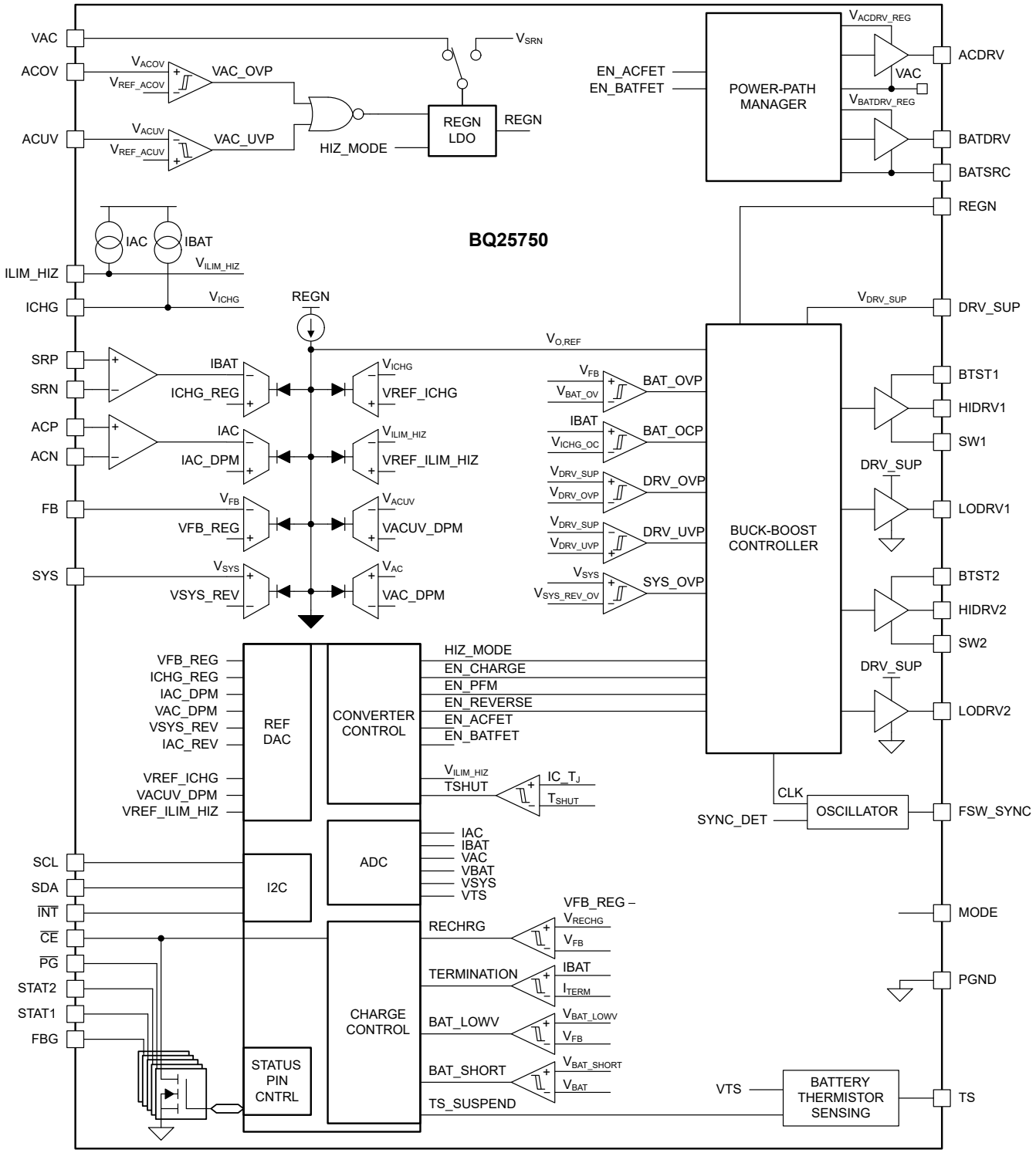

8.3 Feature Description

8.3.1 Device Power-On-Reset

The internal bias circuits are powered from either VAC or SRN. When VAC rises above V_{VAC_OK}, the ACFET driver is active and charging is allowed. When BAT rises above 3 V, the BATFET driver is active, and reverse mode operation is allowed.

A POR occurs when one of these supplies rises above its corresponding V_{OK} level, while the other supply is below its corresponding V_{OK} level. After the POR, I^2C interface is ready for communication and all the registers are reset to default value. The host can access all the registers after POR.

8.3.2 Device Power-Up From Battery Without Input Source

If only battery is present and the voltage is above V_{SRN_OK} threshold, the BATFET turns on and connects battery to system. The REGN LDO stays off to minimize the quiescent current. The N-type driver allows for use of low $R_{DS,ON}$ external BATFET, minimizing the conduction loss. The low quiescent current on BAT maximizes the battery run time. The ADC can be used to monitor discharge current through SRP and SRN pins. The BATFET can be forced to turn off via the FORCE_BATFET_OFF register bit.

8.3.3 Device Power Up from Input Source

When a valid input source (V_{VAC_OK} < VAC and VAC within the ACUV and ACOV operating window) is detected, the ACFET turns on to connect the input to the system, and the $\overline{PG}$ pin pulls LOW. If charging is enabled, the device proceeds to enable the REGN LDO and power up the buck-boost converter.

8.3.3.1 VAC Operating Window Programming (ACUV and ACOV)

The VAC operating window can be programmed via the ACUV and ACOV pins using a three-resistor divider from VAC to PGND as shown in Figure 8-1.

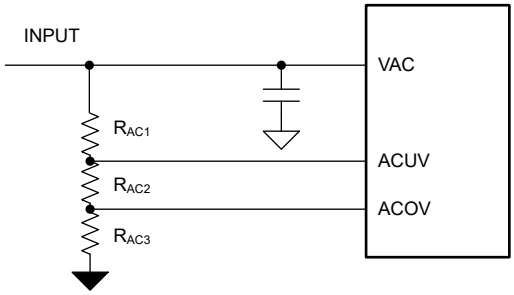

Figure 8-1. ACUV and ACOV Programming

When V_{ACUV} falls and reaches V_{ACUV_DPM}, the device enters input voltage regulation, thereby reducing the charge current. V_{ACUV} continues falling below V_{REF_ACUV}, the device automatically stops the converter, turns off the ACFET, turns on the BATFET and the $\overline{PG}$ pin pulls high.

System Note: if VAC_DPM register is programmed to a value higher than POR, the device regulates the VAC voltage to the higher of VAC_DPM register or V_{ACUV_DPM} pin voltage. Refer to Section 8.3.5.1.2 for more information.

When V_{ACOV} rises above V_{REF_ACOV}, the device automatically stops the converter, turns off the ACFET, turns on the BATFET and the $\overline{PG}$ pin pulls high.

The following equations govern the relationship between the resistor divider and the target operating voltage window programmed by ACOV and ACUV pins:

$$V_{ACOV_TARGET} = V_{REF_ACOV} \times \frac{R_{AC1} + R_{AC2} + R_{AC3}}{R_{AC3}} \quad (1)$$

$$V_{ACUV_TARGET} = V_{REF_ACUV} \times \frac{R_{AC1} + R_{AC2} + R_{AC3}}{R_{AC2} + R_{AC3}} \quad (2)$$

Copyright © 2023 Texas Instruments Incorporated

If unused, tie ACUV to VAC and ACOV to PGND in order to apply the internal VAC operating window (V_{VAC_OP}).

8.3.3.2 REGN Regulator (REGN LDO)

The REGN LDO regulator provides a regulated bias supply for the IC and the TS external resistors. Additionally, REGN voltage can be used to drive the buck-boost switching FETs directly by tying the DRV_SUP pin to REGN. The pull-up rail of $\overline{PG}$, STAT1, and STAT2 can be connected to REGN as well. The REGN LDO is enabled when below conditions are valid:

1. VAC voltage above V_{VAC_OK} and charge is enabled in forward mode.
2. BAT voltage above 3 V in Reverse mode and Reverse Mode is enabled (EN_REV = 1)

At high input voltages and/or large gate drive requirements, the power loss from gate driving via the REGN LDO can be excessive. This power for the gate drivers can be provided externally by directly driving the DRV_SUP pin with a high efficiency supply ranging from 4.5 V to 12 V. This supply should be able to provide at least 50 mA or more as required to drive the switching FET gate charge.

The power dissipation for driving the gates via the REGN LDO is: $P_{REGN} = \left(VAC - V_{REGN}\right) \times Q_{G(TOT)1,2,3,4} \times f_{SW}$, where $Q_{G(TOT)1,2,3,4}$ is the sum of the total gate charge for all switching FETs and f_{SW} is the programmed switching frequency. The Safe Operating Area (SOA) below is based on a 1-W power loss limit.

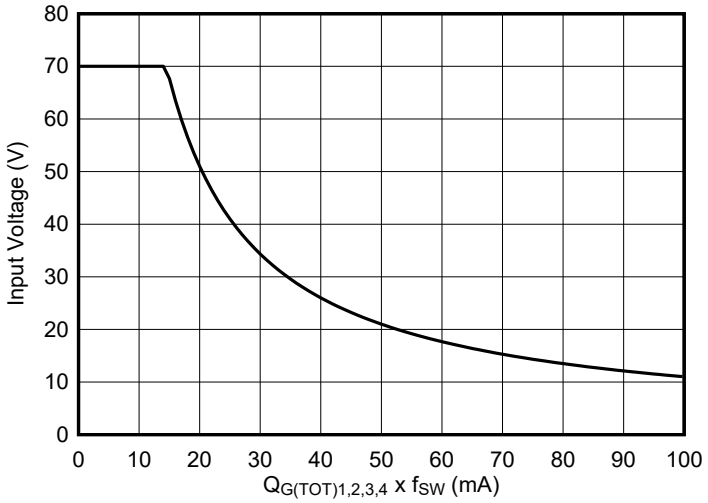

Figure 8-2. REGN LDO Safe Operating Area (SOA)

8.3.3.3 Compensation-Free Buck-Boost Converter Operation

The device integrates all the loop compensation, thereby providing a high density solution with ease of use. At startup, the device toggles the SW node for about 40 ms to determine the correct compensation values for a given set of passives. If the battery is above VBAT_LOWV, then SW2 is toggled. SW1 is toggled otherwise.

The charger employs a synchronous buck-boost converter that allows charging from a wide range of input voltage sources. The charger operates in buck, buck-boost or boost mode. The converter can operate uninterruptedly and continuously across the three operation modes. During buck-boost mode, the converter alternates a SW1 pulse with a SW2 pulse, with effective switching frequency interleaved among these pulses for highest efficiency operation.

During boost mode operation, the HS FET is forced to turn on for 225 ns in each switching cycle to ensure inductor energy is delivered to the output, effectively limiting the maximum boosting ratio. For example, when device is configured to switch at 500 kHz, the switching period is 2 µs, yielding a duty cycle limit of (1 - 0.225 µs/2 µs) = 88.75%. Given a 5-V input, this translates to a maximum 44-V output assuming 100% efficiency. The true output will be lower than this ideal limit. At lower switching frequencies, the maximum duty cycle increases, making the limitation less significant.

Copyright © 2023 Texas Instruments Incorporated

Table 8-1. Switching MOSFET Operation

MODE	BUCK	BUCK-BOOST	BOOST
HS BUCK FET	Switching at f_{SW}	Switching (f_{SW} interleaved between SW1 and SW2)	ON
LS BUCK FET	Switching at f_{SW}	Switching (f_{SW} interleaved between SW1 and SW2)	OFF
LS BOOST FET	OFF	Switching (f_{SW} interleaved between SW1 and SW2)	Switching at f_{SW}
HS BOOST FET	ON	Switching (f_{SW} interleaved between SW1 and SW2)	Switching at f_{SW}

8.3.3.3.1 Light-Load Operation

In order to improve converter light-load efficiency, the device switches to Pulse Frequency Modulation (PFM) control at light load when the EN_PFM bit is set to 1. The effective switching frequency will decrease accordingly when output load decreases.

EN_PFM bit is automatically cleared to 0 every time the converter starts and a valid SYNC clock input is detected on the FSW_SYNC pin, thereby ensuring fixed frequency operation regardless of output current. The bit can be overwritten to 1 to allow PFM after startup even when SYNC signal is present.

Light-load PFM mode can be disabled by clearing the EN_PFM bit. In this case, the device switches in PWM mode at a fixed switching frequency. It is recommended to disable PFM mode (EN_PFM = 0) when termination is enabled and set lower than 2 A.

8.3.3.4 Switching Frequency and Synchronization (FSW_SYNC)

The device switching frequency can be programmed between 200 kHz to 600 kHz using a resistor from the FSW_SYNC pin to PGND. The R_{FSW} resistor is related to the nominal switching frequency (f_{SW}) by the equation:

$$R_{FSW} = \frac{1}{10 \times \left(f_{SW} \times 5 \times 10^{-12} - 500 \times 10^{-9}\right)} \quad (3)$$

This pin must be pulled to PGND using a R_{FSW}, do not leave floating. In addition to programming the nominal switching frequency, the FSW_SYNC pin can also be used to synchronize the internal oscillator to an external clock signal. The synchronization feature works over the same range as the switching frequency: 200-kHz to 600-kHz range.

Table 8-2. Common R_{FSW} and Switching Frequency Values

R_{FSW} (kΩ)	SWITCHING FREQUENCY (kHz)
200	200
133	250
100	300
80	350
66.67	400
57.1	450
50	500
44.4	550
40	600

8.3.3.5 Device HIZ Mode

When a valid input supply is present, it is possible to force the device into HIZ Mode which disables switching, disables REGN LDO, turns off the ACFET, turns on the BATFET. The system load is provided by the battery in

Copyright © 2023 Texas Instruments Incorporated

this mode. The device draws less than I_{HIZ_VAC} from the input supply in this mode. The charger enters HIZ Mode when EN_HIZ bit is set to 1 or the ILIM_HIZ pin is pulled above $V_{IH_ILIM_HIZ}$ (refer to Section 8.3.5.1.1.1).

If the device is operating in reverse mode with the converter turned on, and the device enters HIZ mode (EN_HIZ bit is set to 1 or ILIM_HIZ pin is pulled above $V_{IH_ILIM_HIZ}$), switching stops and the system load is provided by the battery through the BATFETs. Once HIZ mode condition is cleared by the host, the device resumes reverse mode operation, powering the system through the converter with the BATFET off.

The device exits HIZ Mode when the EN_HIZ bit is cleared to 0 and the ILIM_HIZ pin is pulled below 0.4 V.

8.3.4 Battery Charging Management

The device charges 1-cell up-to 14-cell Li-Ion batteries and 1-cell up-to 16-cell $LiFePO_4$ batteries. The charge cycle is autonomous and requires no host interaction.

8.3.4.1 Autonomous Charging Cycle

When battery charging is enabled (EN_CHG bit =1 and $\overline{CE}$ pin is LOW), the device autonomously completes a charging cycle without host involvement. The device charging parameters can be set by hardware through the FB pin to set regulation voltage and the ICHG pin to set charging current. The host can always control the charging operation and optimize the charging parameters by writing to the corresponding registers through I^2C.

Table 8-3. Li-Ion & $LiFePO_4$ Charging Parameter Default Settings

PARAMETER	VALUE
Charge Stages	Precharge → Fast Charge (CC) → Taper Charge (CV) → Termination → Recharge
FB Voltage Regulation Target (VFB_REG)	1.536 V
Battery Low Voltage (VBAT_LOWV)	66.7% x VFB_REG = 1.0245 V
Recharge Voltage (VRECHG)	97.6% x VFB_REG =1.4991 V
Charging Current HW Limit (ICHG pin)	ICHG = K_{ICHG} / R_{ICHG}
Pre-Charge Current HW Limit (ICHG pin)	20% x ICHG
Termination Current HW Limit (ICHG pin)	10% x ICHG
CV Timer	Disabled
NTC Temperature Profile	JEITA
Safety Timer	12 hours

A new charge cycle starts when the following conditions are valid:

- VAC is within the ACUV and ACOV operating window
- Device is not in HIZ mode (EN_HIZ = 0 and ILIM_HIZ pin voltage is below $V_{IH_ILIM_HIZ}$)
- REGN is above V_{REGN_OK}
- Battery charging is enabled (EN_CHG = 1 and $\overline{CE}$ pin is LOW)
- No thermistor fault on TS
- No safety timer fault

For lithium-ion battery charging, the charger device automatically terminates the charging cycle when the charging current is below termination threshold, charge voltage is above recharge threshold, and device is not in DPM mode. When a full battery voltage is discharged below recharge threshold (threshold selectable via VRECHG[1:0] bits), the device automatically starts a new charging cycle. After the charge is done, toggle either $\overline{CE}$ pin or EN_CHG bit can initiate a new charging cycle. In addition, the device offers a dedicated CV timer to stop the charging after a programmable period (CV_TMR bits) in CV mode, regardless of the charge current value.

The status register (CHARGE_STAT) indicates the different charging phases as:

- 000 – Not Charging
- 001 – Trickle Charge (VFB < V_{BAT_SHORT})
- 010 – Pre-charge (V_{BAT_SHORT} < VFB < V_{BAT_LOWV})

Copyright © 2023 Texas Instruments Incorporated

- 011 – Fast-charge (CC mode)
- 100 – Taper Charge (CV mode)
- 101 – Reserved
- 110 – Top-off Timer Active Charging
- 111 – Charge Termination Done

When the charger transitions to any of these states, including when charge cycle is completed, an INT pulse is asserted to notify the host.

Supercapacitors do not require Trickle Charge or Pre-charge regions when their voltage is low. For supercapacitor charging, setting the EN_PRECHG bit to 0 can disable both of these charging regions. In this case, the charger outputs ICHG current as long as the feedback voltage (V_{FB}) is below VFB_REG. The following settings are recommended for supercapacitor charging:

- EN_PRECHG = 0
- EN_TERM = 0
- EN_CHG_TMR = 0

8.3.4.1.1 Charge Current Programming (ICHG pin and ICHG_REG)

There are two distinct thresholds to limit the charge current (if both are enabled, the lowest limit of these will apply):

1. ICHG pin pull down resistor (hardware control)
2. ICHG_REG register bits (host software control)

To set the maximum charge current using the ICHG pin, a pull-down resistor to PGND is used. It is required to use a 5-mΩ R_{BAT_SNS} sense resistor. The charge current limit is controlled by:

$$I_{CHG_MAX} = \frac{K_{ICHG}}{R_{ICHG}} \quad (4)$$

The precharge current limit is defined as I_{PRECHG_MAX} = 20% x I_{CHG_MAX}, and the termination current is I_{TERM} = 10% x I_{CHG_MAX}.

The actual charge current limit is the lower value between ICHG pin setting and I^2C register setting (ICHG_REG). For example, if the register setting is 10 A (0xC8), and ICHG pin has a 10-kΩ resistor (K_{ICHG} = 50 A-kΩ) to ground for 5 A, the actual charge current limit is 5 A. The device regulates ICHG pin at V_{REF_ICHG}. If ICHG pin voltage exceeds V_{REF_ICHG}, the device enters charge current regulation.

The ICHG pin can also be used to monitor charge current when device is not in charge current regulation. When not in charge current regulation, the voltage on ICHG pin (V_{ICHG}) is proportional to the actual charging current. ICHG pin can be used to monitor battery current with the following relationship:

$$I_{BAT} = \frac{K_{ICHG} \times V_{ICHG}}{R_{ICHG} \times V_{REF_ICHG}} \quad (5)$$

For example, if ICHG pin is set with 10-kΩ resistor, and the ICHG voltage 1.0V, the actual charge current is between 2.4 A to 2.6 A (based on K_{ICHG} specified).

If ICHG pin is shorted to PGND, the charge current limit is set by the ICHG_REG register. If hardware charge current limit function is not needed, it is recommended to short this pin to PGND. The ICHG pin function can be disabled by setting the EN_ICHG_PIN bit to 0 (recommended when pin is shorted to PGND). When the pin is disabled, charge current limit and monitoring functions via ICHG pin are not available.

To set the maximum charge current using the ICHG_REG register bits, write to the ICHG_REG register bits. The charge current limit range is from 400 mA to 20,000 mA with 50 mA/step. The default ICHG_REG is set to maximum code, allowing ICHG pin to limit the current in hardware.

Copyright © 2023 Texas Instruments Incorporated

8.3.4.2 Li-Ion Battery Charging Profile

The device charges the battery in five phases: trickle charge, pre-charge, constant current, constant voltage, and top-off trickle charging (optional). At the beginning of a charging cycle, the device checks the battery voltage and regulates current/voltage accordingly.

Table 8-4. Recommended Li-Ion Charge Settings

PARAMETER	I²C REGISTER BITS	VALUE	EQUIVALENT PER 4.2-V CHARGE (V)
Battery Low Voltage	VBAT_LOWV	0x3 = 71.4% x VFB_REG	3.0 V
Recharge Voltage	VRECHG	0x3 = 97.6% x VFB_REG	4.1 V

If the charger device is in DPM regulation during charging, the actual charging current will be less than the programmed value. In this case, termination is temporarily disabled and the charging safety timer is counted at half the clock rate, as explained in Charging Safety Timer.

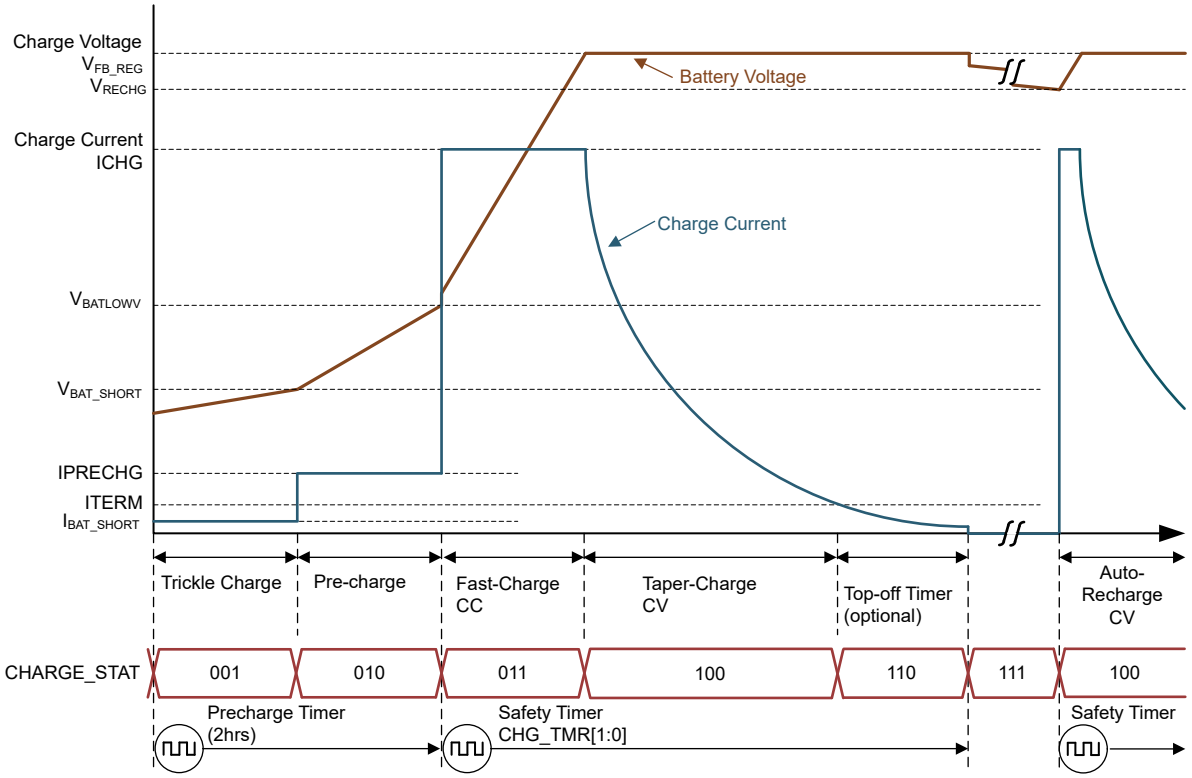

Figure 8-3. Typical Li-Ion Battery Charging Profile

8.3.4.3 LiFePO$_4$ Battery Charging Profile

The device charges the battery in five phases: trickle charge, pre-charge, constant current, constant voltage, and top-off trickle charging (optional). At the beginning of a charging cycle, the device checks the battery voltage and regulates current/voltage accordingly.

Table 8-5. Recommended LiFePO$_4$ Charge Settings

PARAMETER	I²C REGISTER BITS	VALUE	EQUIVALENT PER 3.6-V CHARGE (V)
Battery Low Voltage	VBAT_LOWV	0x1 = 55% x VFB_REG	1.98 V
Recharge Voltage	VRECHG	0x0 = 93% x VFB_REG	3.35 V

Copyright © 2023 Texas Instruments Incorporated

If the charger device is in DPM regulation during charging, the actual charging current will be less than the programmed value. In this case, termination is temporarily disabled and the charging safety timer is counted at half the clock rate, as explained in Charging Safety Timer. The typical charging cycle for $LiFePO_4$ follows the same profile as Typical Li-Ion Battery Charging Profile.

8.3.4.4 Charging Termination for Li-ion and $LiFePO_4$

The device terminates a charge cycle when the battery voltage is above recharge threshold, and the current is below termination current. The termination current threshold is controlled by the lower option between 10% x ICHG pin setting or the ITERM register setting.

In standalone applications using the ICHG pin to program the current, the termination threshold is set at 10% of the ICHG pin value (10-A ICHG pin programming results in 1-A termination).

In host-controlled applications, the termination current can be programmed using the ITERM register bits. The ICHG pin can still be used to set a hardware limit for the charge current.

After the charging cycle is completed, the buck-boost converter turns off. The ACFET stays on to power the system. When termination occurs, the status register CHARGE_STAT is set to 111, and an INT pulse is asserted to the host. Termination is temporarily disabled when the charger device is in input current, or input voltage regulation. Termination can be permanently disabled by writing 0 to EN_TERM.

At low termination currents, due to the comparator offset, the actual termination current may be up to 20% higher than the termination target. In order to compensate for comparator offset, a programmable top-off timer (default disabled) can be applied after termination is detected. The top-off timer follows safety timer constraints, such that if safety timer is suspended, so is the top-off timer. Similarly, if safety timer is doubled, so is the top-off timer. CHARGE_STAT reports whether the top off timer is active via the 110 code. Once the Top-Off timer expires, the CHARGE_STAT register is set to 111 and an INT pulse is asserted to the host.

8.3.4.5 Charging Safety Timer

The device has built-in safety timer to prevent extended charging cycle due to abnormal battery conditions. The user can program fast charge safety timer through I^2C (CHG_TMR bits). When safety timer expires, the fault register CHG_TMR_STAT bit is set to 1, and an INT pulse is asserted to the host. The safety timer feature can be disabled by clearing EN_CHG_TMR bit.

During input voltage or input current regulation, the safety timer counts at half clock rate as the actual charge current is likely to be below the programmed setting. For example, if the charger is in input current regulation (IAC_DPM_STAT=1) throughout the whole charging cycle, and the safety timer is set to 5 hours, then the timer will expire in 10 hours. The timer also counts at half clock rate for TS pin events which reduce charge current (refer to JEITA Guideline Compliance in Charge Mode section). This half clock rate feature can be disabled by setting EN_TMR2X = 0.

During faults which disable charging, timer is suspended. Once the fault goes away, safety timer resumes. If the charging cycle is stopped and started again, the timer gets reset (toggle $\overline{CE}$ pin or EN_CHG bit restarts the timer).

The pre-charge safety timer is a fixed 2 hour counter that runs when VBAT < V_{BAT_LOWV}. The pre-charge safety timer is disabled when EN_PRECHG bit is 0.

8.3.4.6 Thermistor Qualification

The charger device provides a single thermistor input for battery temperature monitor.

8.3.4.6.1 JEITA Guideline Compliance in Charge Mode

To improve the safety of charging Li-ion batteries, JEITA guideline was released on April 20, 2007. The guideline emphasized the importance of avoiding a high charge current and high charge voltage at certain low and high temperature ranges.

Copyright © 2023 Texas Instruments Incorporated

To initiate a charge cycle, the voltage on TS pin must be within the VT1 to VT5 thresholds. If TS voltage exceeds the T1 to T5 range, the controller suspends charging and waits until the battery temperature is within the T1 to T5 range.

At cool temperature, T1 to T2, JEITA recommends the charge current to be reduced to half of the charge current or lower. The device allows charge current in the cool temperature region to be progrramed to 20%, 40% or 100% of the charge current at T2 to T3 or charge suspend, which is controlled by the register bits JEITA_ISETC. If charge current is reduced in the cool temperature region, the safety timer counts at half clock rate when EN_TMR2X = 1.

At warm temperature, T3 to T5, JEITA recommends charge voltage less than 4.1 V / cell. The device provides the programmability of the charge voltage at T3-T5, to be with a voltage offset less than charge voltage at T2 to T3 or charge suspend, which is controlled by the register bits JEITA_VSET.

The charger also provides flexible voltage/current settings beyond the JEITA requirements. The charge current setting at warm temperature T3 to T5 can be configured to be 40%, or 100% of the programmed charge current or charge suspend, which is programmed by the register bit JEITA_ISETH. If charge current is reduced in the JEITA warm region, the safety timer counts at half clock rate when EN_TMR2X = 1.

The default charging profile for JEITA is shown in the figure below, in which the blue line is the default setting and the red dash line is the programmable options.

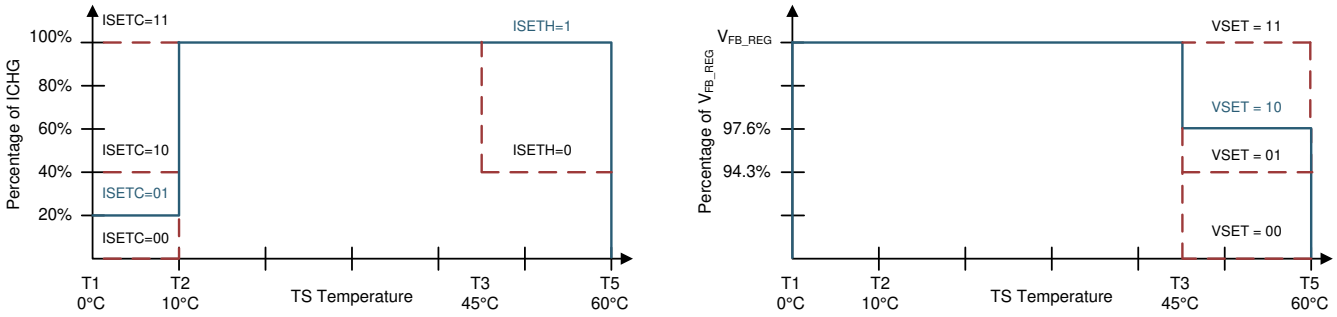

Figure 8-4. TS Charging Values

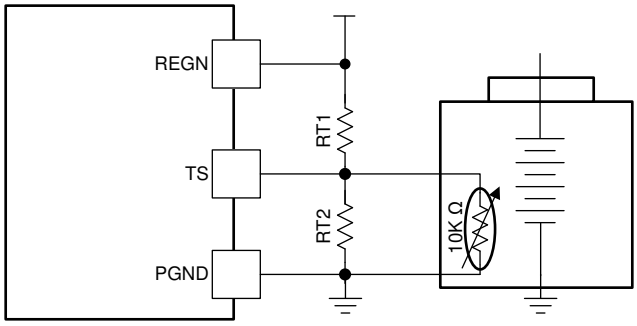

Assuming a 103AT NTC thermistor on the battery pack as shown above, the value of RT1 and RT2 can be determined by:

$$RT2 = \frac{RTH_{COLD} \times RTH_{HOT} \times \left(\frac{1}{VT1} - \frac{1}{VT5}\right)}{RTH_{HOT} \times \left(\frac{1}{VT5} - 1\right) - RTH_{COLD} \times \left(\frac{1}{VT1} - 1\right)} \quad (6)$$

$$RT1 = \frac{\frac{1}{VT1} - 1}{\frac{1}{RT2} + \frac{1}{RTH_{COLD}}} \quad (7)$$

Select 0°C to 60°C range for Li-ion or Li-polymer battery:

Copyright © 2023 Texas Instruments Incorporated

RTH_{T1} = 27.28 kΩ

RTH_{T5} = 3.02 kΩ

RT1 = 5.24 kΩ

RT2 = 30.31 kΩ

The device also offers programmability for all the thresholds via the TS Charging Threshold Control register (REG0x1B). This flexibility can help to change the charger's operating window in software.

The JEITA profile can be disabled by clearing the EN_JEITA register bit. In this case, the device still limits the charging window from T1 to T5, but no special charge profile is employed within the Cool (T1 to T2) or Warm (T3 to T5) regions.

The NTC monitoring window can be disabled by clearing the EN_TS register bit. In this case, the TS pin voltage is ignored, and the device always reports normal TS status. If EN_TS is set to 0, TS pin can be floated or connected to PGND.

8.3.4.6.2 Cold/Hot Temperature Window in Reverse Mode

For battery protection during reverse or auto-reverse mode operation, the device monitors the battery temperature to be within the VBCOLD to VBHOT thresholds. When temperature is outside of the thresholds, the reverse mode is shut off and device returns to powering the system from the battery. In addition, EN_REV, EN_AUTO_REV and REVERSE_STAT bits are cleared to 0 and corresponding TS_STAT is reported (TS Cold or TS Hot). The temperature protection in reverse mode can be completely disabled by clearing the EN_TS bit to 0.

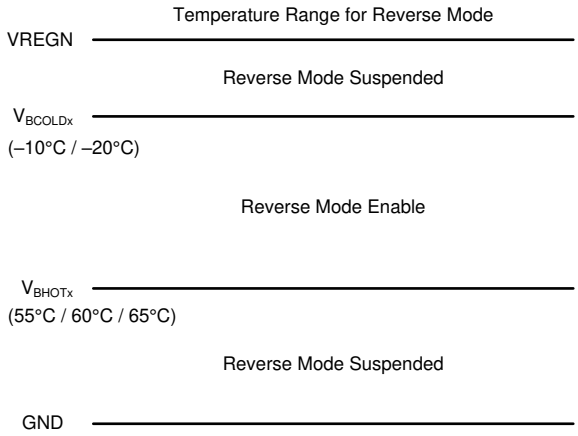

Figure 8-5. TS Pin Thermistor Sense Threshold in Reverse Mode

8.3.5 Power Path Management

The device accommodates a wide range of input sources from 4.2 V up to 70 V. The device provides dynamic power management and automatic power path selection to supply the system (SYS) from input source (VAC), or battery (BAT).

8.3.5.1 Dynamic Power Management: Input Voltage and Input Current Regulation

The device features Dynamic Power Management (DPM), which continuously monitors the input current and input voltage. When input source is over-loaded, either the current exceeds the input current limit (lower of IAC_DPM or ILIM_HIZ pin setting), or the voltage falls below the input voltage limit (higher of VAC_DPM or ACUV pin setting, V_{ACUV_DPM}). The device then reduces the charge current until the input current falls below the input current limit and the input voltage rises above the input voltage limit.

When the charge current is reduced to zero, but the input source is still overloaded, the input voltage continues to drop. Once the input voltage drops below the ACUV limit ($V_{ACUV} < V_{REF_ACUV}$), the charger stops switching and the device automatically transitions to Battery Only Mode so that the system is supported by the battery.

Copyright © 2023 Texas Instruments Incorporated

8.3.5.1.1 Input Current Regulation

The total input current is a function of the system supply current and the battery charging current. System current normally fluctuates as portions of the systems are powered up or down. Without DPM, the source must be able to supply the maximum system current and the maximum charger input current simultaneously. By using DPM, the battery charger reduces the charging current when the input current exceeds the input current limit set by the lower of IAC_DPM register bits, or ILIM_HIZ pin. This allows the current capability of the input source to be lowered, reducing system cost.

There are two thresholds to limit the input current (if both are enabled, the lower limit of these two will apply):

1. IAC_DPM register bits (host software control)
2. ILIM_HIZ pull down resistor (hardware control)

To set the maximum current using the IAC_DPM register bits, write to the IAC_DPM register bits. When using a 2-mΩ resistor, the input current limit range is from 1 A to 50 A with 125 mA/step. The default IAC_DPM is set to maximum code, allowing ILIM_HIZ pin to limit the current in hardware.

To set the maximum current using the ILIM_HIZ pin, refer to Section 8.3.5.1.1.1.

Although both limits are referenced to a 2-mΩ sense resistor, other values can also be used. A larger sense resistor provides a larger sense voltage and higher regulation accuracy, but at the expense of higher conduction loss. For example, using a 5-mΩ resistor yields programmability from 400 mA to 20 A with 50 mA/step.

8.3.5.1.1.1 ILIM_HIZ Pin

To set the maximum input current using the ILIM_HIZ pin, a pull-down resistor to PGND is used. When using a 2-mΩ R_{AC_SNS} resistor, the input current limit is controlled by: $I_{AC_MAX} = K_{ILIM} / R_{ILIM_HIZ}$.

The actual input current limit is the lower value between ILIM_HIZ pin setting and register setting (IAC_DPM). For example, if the register setting is 20 A, and ILIM_HIZ pin has a 5-kΩ resistor (K_{ILIM} = 50 A-kΩ) to ground for 10 A, the actual input current limit is 10 A. ILIM_HIZ pin can be used to set the input current limit when EN_ILIM_HIZ_PIN bit is set to 1. The device regulates the pin at $V_{REF_ILIM_HIZ}$. If pin voltage exceeds $V_{REF_ILIM_HIZ}$, the device enters input current regulation. Entering input current regulation through the pin sets the IAC_DPM_STAT and FLAG bits, and produces an interrupt to host. The interrupt can be masked via the IAC_DPM_MASK bit.

The ILIM_HIZ pin can also be used to monitor input current. When not in input current regulation, the voltage on ILIM_HIZ pin (V_{ILIM_HIZ}) is proportional to the input current. Pin voltage can be used to monitor input current with the following relationship: $IAC = K_{ILIM} \times V_{ILIM_HIZ} / (R_{ILIM_HIZ} \times V_{REF_ILIM_HIZ})$.

For example, if the pin is set with 5-kΩ resistor, and the pin voltage is 1.0 V, the actual input current is between 4.8 A to 5.2 A (based on K_{ILIM} specified).

If ILIM_HIZ pin is shorted, the input current limit is set by the IAC_DPM register. If hardware input current limit function is not needed, it is recommended to short this pin to GND. If ILIM_HIZ pin is pulled above $V_{IH_ILIM_HIZ}$, the device enters HIZ mode (refer to Section 8.3.3.5). The ILIM_HIZ pin function can be disabled by setting the EN_ILIM_HIZ_PIN bit to 0. When the pin is disabled, input current limit and monitoring functions as well as HIZ mode control via the pin are not available.

8.3.5.1.2 Input Voltage Regulation

In addition to input current regulation, the device also offers input voltage regulation to limit the input power. This is especially useful when dealing with input sources such as solar panels, where the operating voltage must be controlled to extract the maximum power. Alternatively, if the input source current limitation is not known, input voltage regulation can be used to limit the power draw from the input source. By using input voltage regulation, the battery charger reduces the charging current when the input voltage falls below the input voltage limit set by the higher of VAC_DPM register bits, or ACUV pin.

There are two thresholds to limit the input voltage (the higher limit of these will apply)

1. VAC_DPM register bits (host software control)
2. ACUV pin falling threshold (hardware control)

Copyright © 2023 Texas Instruments Incorporated

To set the minimum input voltage using the VAC_DPM register bits, write the desired value directly to the VAC_DPM register bits. The default VAC_DPM is set to minimum code, allowing ACUV pin to limit the input voltage in hardware.

To set the minimum input voltage using the ACUV pin, refer to Section 8.3.3.1.

8.3.5.1.2.1 Max Power Point Tracking (MPPT) for Solar PV Panel

When EN_MPPT bit is 1, the device provides a maximum power point tracking (MPPT) algorithm for solar PV panel input sources. The Input Power Maximizer algorithm finds and tracks the maximum power point by full panel sweep.

The full panel sweep is used to find the input operating voltage which delivers the maximum charge current to the battery. Before running a full panel sweep, the device momentarily enters HIZ mode to measure input source open-circuit voltage (V_{OC}). The device proceeds to reduce the input voltage regulation target, measuring the charge current output at each setting. The VAC_DPM register is used to program the minimum voltage to exit the full panel sweep. After the sweep is complete, the device updates the VAC_MPP register to the input voltage regulation value producing the maximum charge current. The device then waits for a period of FULL_SWEEP_TMR[1:0] before performing a new full panel sweep. A full panel sweep can be forced at any time by setting the FORCE_SWEEP bit to 1. Note that EN_MPPT = 1 is required for FORCE_SWEEP to work. The FORCE_SWEEP bit is automatically cleared to 0 after the full panel sweep is completed. Note that the device uses the internal ADC to determine the charge current at each step of the full panel sweep, therefore writes to the IBAT_ADC_DIS bit are ignored while MPPT is enabled (EN_MPPT = 1).

Note that when the system is directly connected to the input supply, the device cannot limit the system load. Therefore, the MPPT algorithm may not find and track the true MPP under all conditions. To enable MPPT operation, it is recommended to connect the system load directly in parallel to the battery pack.

8.3.6 Reverse Mode Power Direction

The device supports buck-boost reverse power direction to deliver power from the battery to the system when the adapter is not present. During this mode of operation, the ACFET and BATFET both remain off. The reverse mode output voltage regulation is set in VSYS_REV register bits. The reverse mode also offers output current regulation via the R_{AC_SNS} resistor. This parameter is controlled by the IAC_REV register bits. The reverse mode operation can be enabled if the following conditions are valid:

1. SRN above 3 V.
2. DRV_SUP voltage within valid operating window ($V_{DRV_UVP} < V_{DRV} < V_{DRV_OVP}$.
3. VAC outside the ACOV / ACUV operating window, or $V_{VAC} < V_{VAC_OK}$, or $V_{VAC} > V_{VAC_INT_OV}$
4. Reverse mode operation is enabled (EN_REV = 1)
5. Voltage at TS (thermistor) pin is within range configured by Reverse Temperature Monitor as configured by BHOT and BCOLD register bits

While the reverse mode is active, the device sets the REVERSE_STAT bit to 1. Host can disable the reverse operation at any time by setting EN_REV bit to 0. The device disables the converter, and turns the BATFET on to connect the battery directly to the system.

The charger also monitors and regulates the battery discharging current in reverse mode. When the battery discharge current rises above the IBAT_REV register setting, the charger reduces the reverse mode power flow to limit the discharge current.

Once a valid VAC voltage is detected for forward operation, the device automatically disables reverse mode (EN_REV = 0), turns on the ACFETs and proceeds to charge the battery if enabled.

8.3.6.1 Auto Reverse Mode

In some applications, a regulated system voltage is required when the adapter power is removed. The BQ25750 integrates an auto-reverse function which provides a regulated system voltage using the buck-boost converter in reverse direction once the input power is removed.

Copyright © 2023 Texas Instruments Incorporated

When enabled by setting the AUTO_REV register bit to 1, Auto Reverse mode can be used to provide a regulated system voltage immediately after the input power is removed. The device transitions to reverse mode with the BATFET off and the converter on when the input falls below the ACUV threshold.

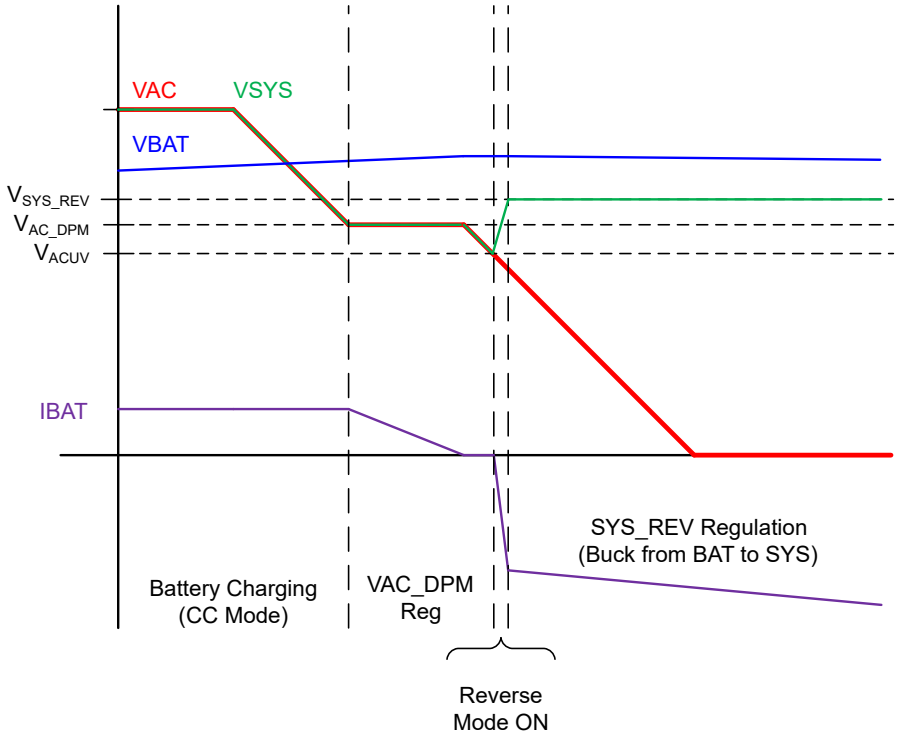

Figure 8-6. Auto Reverse Mode if BAT > VSYS_REV When VAC is Removed

While the Auto reverse mode is active, the device sets the REVERSE_STAT bit to 1. Host can disable the Auto reverse operation at any time by setting EN_AUTO_REV = 0 and EN_REV = 0. The device then disables the converter, and turns the BATFET on to connect the battery directly to the system.

8.3.7 Integrated 16-Bit ADC for Monitoring

The device includes a 16-bit ADC to monitor critical system information based on the device's modes of operation. The ADC is allowed to operate if either the V_{VAC}>V_{VAC_OK} or VBAT>V_{REGN_OK} is valid. The ADC_EN bit provides the ability to enable and disable the ADC to conserve power. The ADC_RATE bit allows continuous conversion or one-shot behavior. After a one-shot conversion finishes, the ADC_EN bit is cleared, and must be re-asserted to start a new conversion.

The ADC_SAMPLE bits control the resolution and sample speed of the ADC. By default, ADC channels will be converted in one-shot or continuous conversion mode unless disabled in the ADC Function Disable register. If an ADC parameter is disabled by setting the corresponding bit, then the read-back value in the corresponding register will be from the last valid ADC conversion or the default POR value (all zeros if no conversions have taken place). If an ADC parameter is disabled in the middle of an ADC measurement cycle, the device will finish the conversion of that parameter, but will not convert the parameter starting the next conversion cycle. If all channels are disabled in one-shot conversion mode, the ADC_EN bit is cleared.

The ADC_DONE_STAT and ADC_DONE_FLAG bits signal when a conversion is complete in one-shot mode only. This event produces an INT pulse, which can be masked with ADC_DONE_MASK. During continuous conversion mode, the ADC_DONE_STAT bit has no meaning and will be '0'. The ADC_DONE_FLAG bit will remain unchanged in continuous conversion mode.

ADC conversion operates independently of the faults present in the device. ADC conversion will continue even after a fault has occurred (such as one that causes the power stage to be disabled), and the host must set

Copyright © 2023 Texas Instruments Incorporated

ADC_EN = '0' to disable the ADC. ADC readings are only valid for DC states and not for transients. When host writes ADC_EN = 0, the ADC stops immediately, and ADC measurement values correspond to last valid ADC reading.

If the host wants to exit ADC more gracefully, it is possible to do either of the following:

1. Write ADC_RATE to one-shot, and the ADC will stop at the end of a complete cycle of conversions, or
2. Disable all ADC conversion channels, and the ADC will stop at the end of the current measurement.

When system load is powered from the battery (input source is removed, or device in HIZ mode), enabling the ADC automatically powers up REGN and increases the quiescent current. To keep the battery leakage low, it is recommended to duty cycle or completely disable the ADC.

8.3.8 Status Outputs ($\overline{PG}$, STAT1, STAT2, and $\overline{INT}$)

8.3.8.1 Power Good Indicator ($\overline{PG}$)

The PG_STAT bit goes HIGH and the $\overline{PG}$ pin pulls LOW to indicate a good input source when a valid VAC voltage is detected. The $\overline{PG}$ pin can drive an LED. All conditions must be met to indicate power good:

1. $V_{VAC_OK} < V_{VAC} < V_{VAC_INT_OV}$
2. $V_{ACUV} > V_{REF_ACUV}$
3. $V_{ACOV} < V_{REF_ACOV}$
4. Device not in HIZ mode

The $\overline{PG}$ pin can be disabled via the DIS_PG_PIN bit. When disabled, this pin can be controlled to pull LOW using the FORCE_STAT3_ON bit.

8.3.8.2 Charging Status Indicator (STAT1, STAT2 Pins)

The device indicates charging state on the open drain STAT1 and STAT2 pins. The STAT1, STAT2 pins can drive LEDs.

Table 8-6. STAT1, STAT2 Pin State

CHARGING STATE	STAT1	STAT2
Charge in progress (including recharge)	ON	OFF
Charge done	OFF	ON
Charging fault detected (TS out of range, safety timer fault, etc.)	ON	ON
Charge disabled (EN_CHG = 0, or $\overline{CE}$ pin high)	OFF	OFF

The STAT1, STAT2 pin function can be disabled via the DIS_STAT_PINS bit. When disabled, these pins can be controlled to independently pull LOW using the FORCE_STAT1_ON and FORCE_STAT2_ON bits. The STAT pins are not affected by the Reverse mode and remain OFF during this mode.

8.3.8.3 Interrupt to Host ($\overline{INT}$)

In some applications, the host does not always monitor the charger operation. The $\overline{INT}$ pin notifies the system host on the device operation. By default, the following events will generate an active-low, 256-µs INT pulse.

1. Valid input source conditions detected (see conditions for $\overline{PG}$ pin)
2. Valid input source conditions removed (see conditions for $\overline{PG}$ pin)
3. Entering IAC_DPM regulation through register or ILIM_HIZ pin
4. Entering VAC_DPM regulation through register or ACUV pin
5. I^2C Watchdog timer expired
6. Charger status changes state (CHARGE_STAT value change), including Charge Complete
7. TS_STAT changes state (TS_STAT value change)
8. Junction temperature shutdown (TSHUT)
9. Battery overvoltage detected (BATOVP)
10. Charge safety timer expired (including pre-charge or CV timer expiration)
11. A rising edge on any of the *_STAT bits

Copyright © 2023 Texas Instruments Incorporated

Each one of these INT sources can be masked off to prevent INT pulses from being sent out when they occur. Three bits exist for each one of these events:

- The STAT bit holds the *current status* of each INT source
- The FLAG bit holds information on which source produced an INT, regardless of the current status
- The MASK bit is used to prevent the device from sending out INT for each particular event

When one of the above conditions occurs (a rising edge on any of the *_STAT bits), the device sends out an INT pulse and keeps track of which source generated the INT via the FLAG registers. The FLAG register bits are automatically reset to zero after the host reads them, and a new edge on STAT bit is required to re-assert the FLAG.

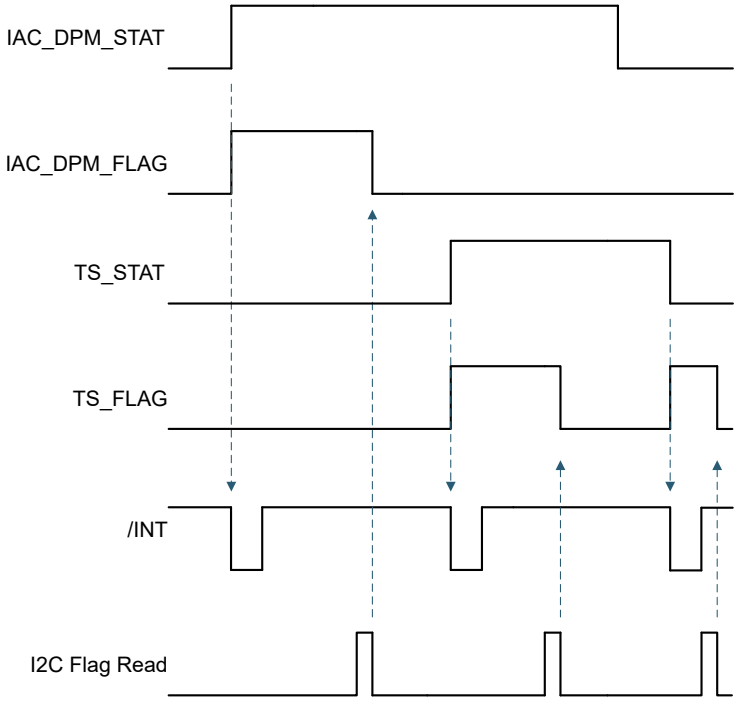

Figure 8-7. INT Generation Behavior Example

8.3.9 Serial Interface

The device uses I^2C compatible interface for flexible charging parameter programming and instantaneous device status reporting. I^2C is a bi-directional 2-wire serial interface. Only two open-drain bus lines are required: a serial data line (SDA), and a serial clock line (SCL). Devices can be considered as controllers or targets when performing data transfers. A controller is a device which initiates a data transfer on the bus and generates the clock signals to permit that transfer. At that time, any device addressed is considered a target.

The device operates as a target device with address 0x6B, receiving control inputs from the controller device like a micro-controller or digital signal processor through the registers defined in the Register Map. Registers read outside those defined in the map, return 0xFF. The I^2C interface supports standard mode (up to 100 kbits/s), fast mode (up to 400 kbits/s), and fast mode plus (up to 1 Mbit/s). When the bus is free, both lines are HIGH. The SDA and SCL pins are open drain and must be connected to the positive supply voltage via a current source or pull-up resistor.

System Note: All 16-bit registers are defined as Little Endian, with the most-significant byte allocated to the higher address. 16-bit register writes must be done sequentially and are recommended to be programmed using multi-write approach described in the Section 8.3.9.7.

Copyright © 2023 Texas Instruments Incorporated

8.3.9.1 Data Validity

The data on the SDA line must be stable during the HIGH period of the clock. The HIGH or LOW state of the data line can only change when the clock signal on SCL line is LOW. One clock pulse is generated for each data bit transferred.

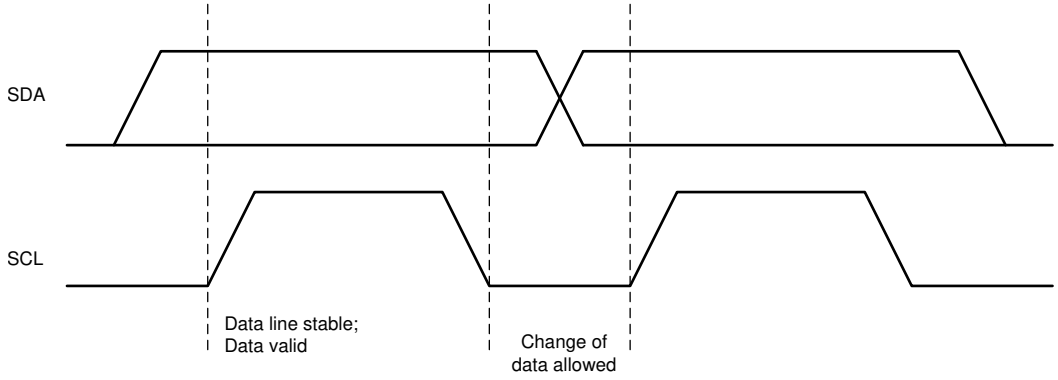

Figure 8-8. Bit Transfers on the I²C Bus

8.3.9.2 START and STOP Conditions

All transactions begin with a START (S) and are terminated with a STOP (P). A HIGH to LOW transition on the SDA line while SCL is HIGH defines a START condition. A LOW to HIGH transition on the SDA line when the SCL is HIGH defines a STOP condition.

START and STOP conditions are always generated by the controller. The bus is considered busy after the START condition, and free after the STOP condition. When timeout condition is met, for example START condition is active for more than 2 seconds and there is no STOP condition triggered, the charger I²C communication will automatically reset and communication lines are free for another transmission.

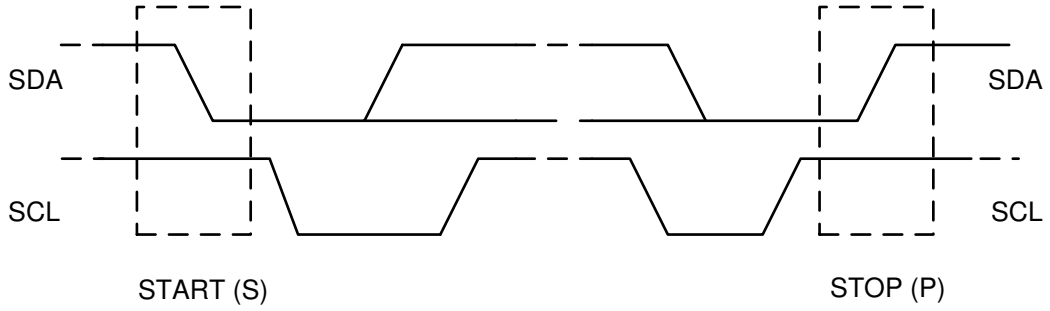

Figure 8-9. START and STOP Conditions on the I²C Bus

8.3.9.3 Byte Format

Every byte on the SDA line must be 8 bits long. The number of bytes to be transmitted per transfer is unrestricted. Each byte has to be followed by an ACKNOWLEDGE (ACK) bit. Data is transferred with the Most Significant Bit (MSB) first. If a target cannot receive or transmit another complete byte of data until it has performed some other function, it can hold the SCL line low to force the controller into a wait state (clock stretching). Data transfer then continues when the target is ready for another byte of data and releases the SCL line.

Copyright © 2023 Texas Instruments Incorporated

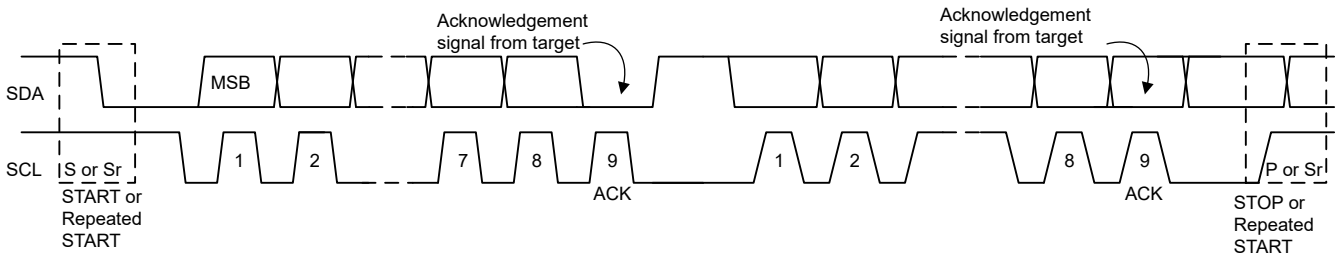

Figure 8-10. Data Transfer on the I²C Bus

8.3.9.4 Acknowledge (ACK) and Not Acknowledge (NACK)

The ACK signaling takes place after byte. The ACK bit allows the target to signal the controller that the byte was successfully received and another byte may be sent. All clock pulses, including the acknowledge 9th clock pulse, are generated by the controller.

The controller releases the SDA line during the acknowledge clock pulse so the target can pull the SDA line LOW and it remains stable LOW during the HIGH period of this 9th clock pulse.

A NACK is signaled when the SDA line remains HIGH during the 9th clock pulse. The controller can then generate either a STOP to abort the transfer or a repeated START to start a new transfer.

8.3.9.5 Target Address and Data Direction Bit

After the START signal, a target address is sent. This address is 7 bits long, followed by the 8 bit as a data direction bit (bit R/ $\overline{W}$). A zero indicates a transmission (WRITE) and a one indicates a request for data (READ). The device 7-bit address is defined as 1101 011' (0x6B) by default.

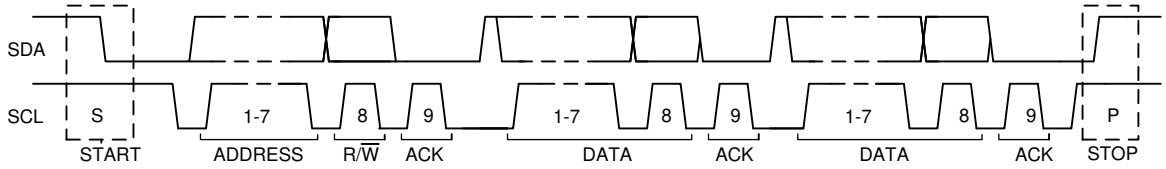

Figure 8-11. Complete Data Transfer on the I²C Bus

8.3.9.6 Single Write and Read

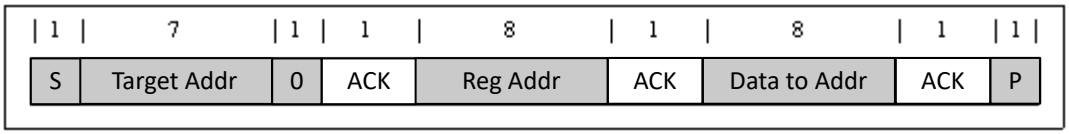

Figure 8-12. Single Write

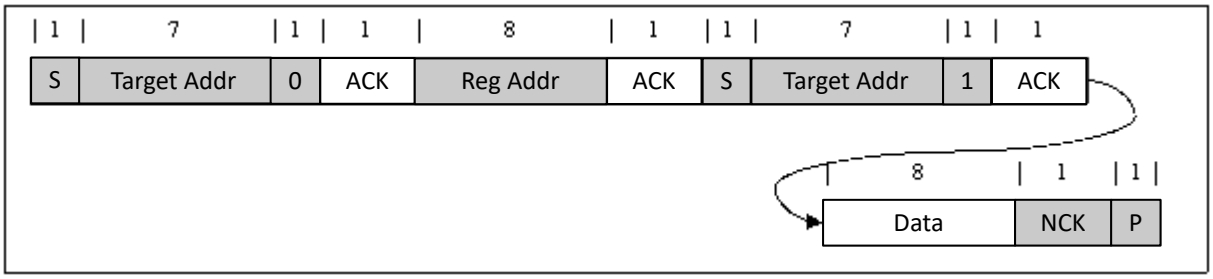

Figure 8-13. Single Read

If the register address is not defined, the charger IC sends back NACK and returns to the idle state.

Copyright © 2023 Texas Instruments Incorporated

8.3.9.7 Multi-Write and Multi-Read

The charger device supports multi-read and multi-write of all registers.

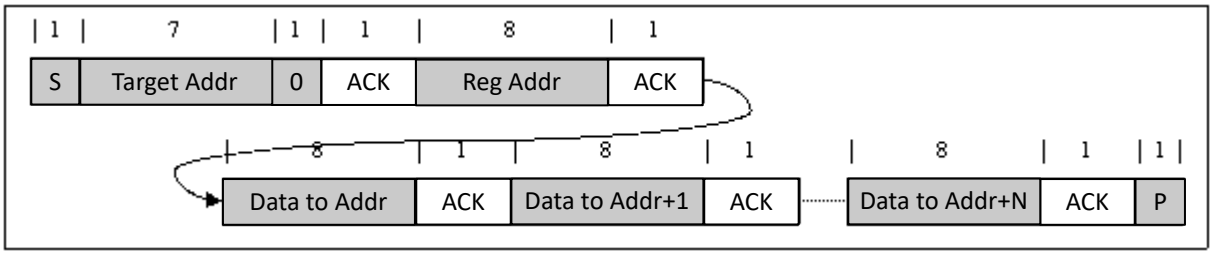

Figure 8-14. Multi-Write

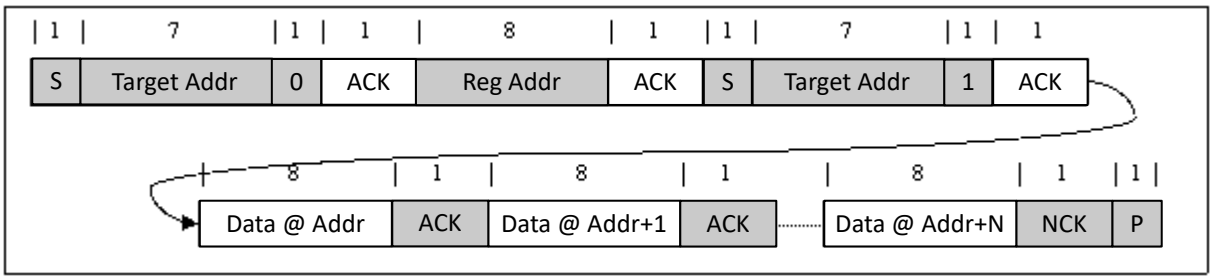

Figure 8-15. Multi-Read

8.4 Device Functional Modes

8.4.1 Host Mode and Default Mode

The device is a host controlled charger, but it can operate in default mode without host management. In default mode, the device can be used as an autonomous charger with no host or while host is in sleep mode. When the charger is in default mode, WD_STAT bit becomes HIGH, WD_FLAG is set to 1, and a $\overline{INT}$ is asserted low to alert the host (unless masked by WD_MASK). The WD_FLAG bit would read as a '1' upon the first read and then '0' upon subsequent reads. When the charger is in host mode, WD_STAT bit is LOW.

After power-on-reset, the device starts in default mode with watchdog timer expired. All the registers are in the default settings.

In default mode, the device keeps charging the battery with default 2-hour pre-charging safety timer and the 12-hour fast charging safety timer. At the end of the 2-hour or 12-hour timer expiration, the charging is stopped if termination has not been detected.

A write to any I^2C register transitions the charger from default mode to host mode, and initiates the watchdog timer. All the device parameters can be programmed by the host. To keep the device in host mode, the host has to reset the watchdog timer by writing 1 to WD_RST bit before the watchdog timer expires (WD_STAT bit is set), or disable watchdog timer by setting WATCHDOG bits = 00.

When the watchdog timer is expired, the device returns to default mode and select registers are reset to default values as detailed in the Register Map section. The Watchdog timer will be reset on any write if the watchdog timer has expired. When watchdog timer expires, WD_STAT and WD_FLAG is set to 1, and /INT is asserted low to alert the host (unless masked by WD_MASK).

Copyright © 2023 Texas Instruments Incorporated

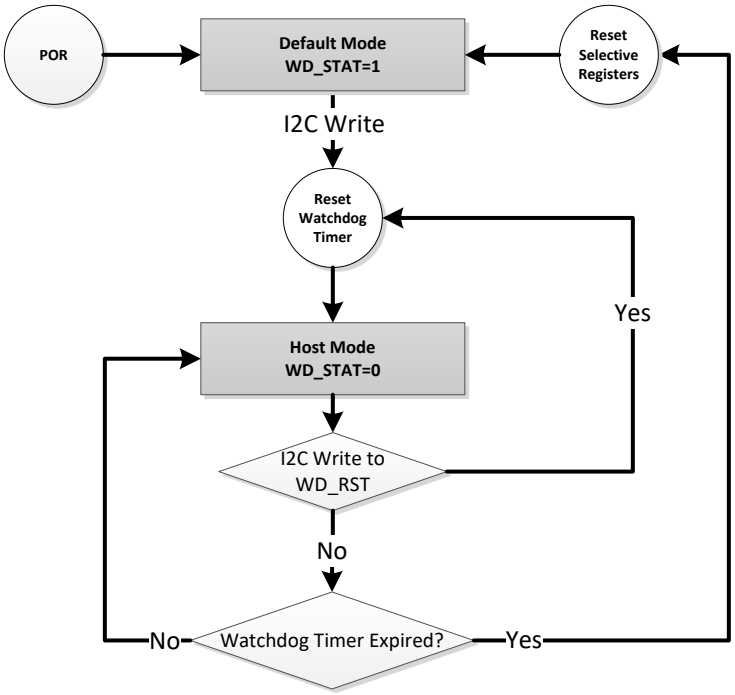

Figure 8-16. Watchdog Timer Flow Chart

8.4.2 Register Bit Reset

Beside the register reset by the watchdog timer in the default mode, the register and the timer could be reset to the default value by writing the REG_RST bit to 1. The register bits which can be reset by the REG_RST bit, are noted in the Register Map section. After the register reset, the REG_RST bit will go back from 1 to 0 automatically.

Copyright © 2023 Texas Instruments Incorporated

8.5 BQ25750 Registers

Table 8-7 lists the memory-mapped registers for the BQ25750 registers. All register offset addresses not listed in Table 8-7 should be considered as reserved locations and the register contents should not be modified.

Table 8-7. BQ25750 Registers

Address	Acronym	Register Name	Section
0x0	REG0x00_Charge_Voltage_Limit	Charge Voltage Limit	Go
0x2	REG0x02_Charge_Current_Limit	Charge Current Limit	Go
0x6	REG0x06_Input_Current_DPM_Limit	Input Current DPM Limit	Go
0x8	REG0x08_Input_Voltage_DPM_Limit	Input Voltage DPM Limit	Go
0xA	REG0x0A_Reverse_Mode_Input_Current_Limit	Reverse Mode Input Current Limit	Go
0xC	REG0x0C_Reverse_Mode_System_Voltage_Limit	Reverse Mode System Voltage Limit	Go
0x10	REG0x10_Precharge_Current_Limit	Precharge Current Limit	Go
0x12	REG0x12_Termination_Current_Limit	Termination Current Limit	Go
0x14	REG0x14_Precharge_and_Termination_Control	Precharge and Termination Control	Go
0x15	REG0x15_Timer_Control	Timer Control	Go
0x16	REG0x16_Three-Stage_Charge_Control	Three-Stage Charge Control	Go
0x17	REG0x17_Charger_Control	Charger Control	Go
0x18	REG0x18_Pin_Control	Pin Control	Go
0x19	REG0x19_Power_Path_and_Reverse_Mode_Control	Power Path and Reverse Mode Control	Go
0x1A	REG0x1A_MPPT_Control	MPPT Control	Go
0x1B	REG0x1B_TS_Charging_Threshold_Control	TS Charging Threshold Control	Go
0x1C	REG0x1C_TS_Charging_Region_Behavior_Control	TS Charging Region Behavior Control	Go
0x1D	REG0x1D_TS_Reverse_Mode_Threshold_Control	TS Reverse Mode Threshold Control	Go
0x1E	REG0x1E_Reverse_Undervoltage_Control	Reverse Undervoltage Control	Go
0x1F	REG0x1F_VAC_Max_Power_Point_Detected	VAC Max Power Point Detected	Go
0x21	REG0x21_Charger_Status_1	Charger Status 1	Go
0x22	REG0x22_Charger_Status_2	Charger Status 2	Go
0x23	REG0x23_Charger_Status_3	Charger Status 3	Go
0x24	REG0x24_Fault_Status	Fault Status	Go
0x25	REG0x25_Charger_Flag_1	Charger Flag 1	Go
0x26	REG0x26_Charger_Flag_2	Charger Flag 2	Go
0x27	REG0x27_Fault_Flag	Fault Flag	Go
0x28	REG0x28_Charger_Mask_1	Charger Mask 1	Go
0x29	REG0x29_Charger_Mask_2	Charger Mask 2	Go
0x2A	REG0x2A_Fault_Mask	Fault Mask	Go
0x2B	REG0x2B_ADC_Control	ADC Control	Go
0x2C	REG0x2C_ADC_Channel_Control	ADC Channel Control	Go
0x2D	REG0x2D_IAC_ADC	IAC ADC	Go
0x2F	REG0x2F_IBAT_ADC	IBAT ADC	Go
0x31	REG0x31_VAC_ADC	VAC ADC	Go
0x33	REG0x33_VBAT_ADC	VBAT ADC	Go
0x35	REG0x35_VSYS_ADC	VSYS ADC	Go
0x37	REG0x37_TS_ADC	TS ADC	Go
0x39	REG0x39_VFB_ADC	VFB ADC	Go
0x3B	REG0x3B_Gate_Driver_Strength_Control	Gate Driver Strength Control	Go
0x3C	REG0x3C_Gate_Driver_Dead_Time_Control	Gate Driver Dead Time Control	Go

Copyright © 2023 Texas Instruments Incorporated

Table 8-7. BQ25750 Registers (continued)

Address	Acronym	Register Name	Section
0x3D	REG0x3D_Part_Information	Part Information	Go
0x62	REG0x62_Reverse_Mode_Battery_Discharge_Current	Reverse Mode Battery Discharge Current	Go

Complex bit access types are encoded to fit into small table cells. Table 8-8 shows the codes that are used for access types in this section.

Table 8-8. BQ25750 Access Type Codes

Access Type	Code	Description
Read Type		
R	R	Read
Write Type		
W	W	Write
Reset or Default Value		
-n		Value after reset or the default value

8.5.1 REG0x00_Charge_Voltage_Limit Register (Address = 0x0) [Reset = 0x0010]

REG0x00_Charge_Voltage_Limit is shown in Table 8-9.

Return to the Summary Table.

I2C REG0x01=[15:8], I2C REG0x00=[7:0]

Table 8-9. REG0x00_Charge_Voltage_Limit Register Field Descriptions

Bit	Field	Type	Reset	Notes	Description
15:5	RESERVED	R	0x0		Reserved
4:0	VFB_REG	R/W	0x10	Reset by: REG_RESET	FB Voltage Regulation Limit: POR: 1536mV (10h) Range: 1504mV-1566mV (0h-1Fh) Bit Step: 2mV Offset: 1504mV

8.5.2 REG0x02_Charge_Current_Limit Register (Address = 0x2) [Reset = 0x0640]

REG0x02_Charge_Current_Limit is shown in Table 8-10.

Return to the Summary Table.

I2C REG0x03=[15:8], I2C REG0x02=[7:0]

Table 8-10. REG0x02_Charge_Current_Limit Register Field Descriptions

Bit	Field	Type	Reset	Notes	Description
15:11	RESERVED	R	0x0		Reserved
10:2	ICHG_REG	R/W	0x190	Reset by: REG_RESET WATCHDOG	Fast Charge Current Regulation Limit with 5mΩ RBAT_SNS: Actual charge current is the lower of ICHG_REG and ICHG pin POR: 20000mA (190h) Range: 400mA-20000mA (8h-190h) Clamped Low Clamped High Bit Step: 50mA

Copyright © 2023 Texas Instruments Incorporated

Table 8-10. REG0x02_Charge_Current_Limit Register Field Descriptions (continued)

Bit	Field	Type	Reset	Notes	Description
1:0	RESERVED	R	0x0		Reserved

8.5.3 REG0x06_Input_Current_DPM_Limit Register (Address = 0x6) [Reset = 0x0640]

REG0x06_Input_Current_DPM_Limit is shown in Table 8-11.

Return to the Summary Table.

I2C REG0x07=[15:8], I2C REG0x06=[7:0]

Table 8-11. REG0x06_Input_Current_DPM_Limit Register Field Descriptions

Bit	Field	Type	Reset	Notes	Description
15:11	RESERVED	R	0x0		Reserved
10:2	IAC_DPM	R/W	0x190	Reset by: REG_RESET	Input Current DPM Regulation Limit with 2mΩ RAC_SNS: Actual input current limit is the lower of IAC_DPM and ILIM_HIZ pin POR: 50000mA (190h) Range: 1000mA-50000mA (8h-190h) Clamped Low Clamped High Bit Step: 125mA
1:0	RESERVED	R	0x0		Reserved

8.5.4 REG0x08_Input_Voltage_DPM_Limit Register (Address = 0x8) [Reset = 0x0348]

REG0x08_Input_Voltage_DPM_Limit is shown in Table 8-12.

Return to the Summary Table.

I2C REG0x09=[15:8], I2C REG0x08=[7:0]

Table 8-12. REG0x08_Input_Voltage_DPM_Limit Register Field Descriptions

Bit	Field	Type	Reset	Notes	Description
15:14	RESERVED	R	0x0		Reserved
13:2	VAC_DPM	R/W	0xD2	Reset by: REG_RESET	Input Voltage Regulation Limit: Note if EN_MPPT = 1, the Full Sweep method will use this limit as the lower search window for Full Panel Sweep POR: 4200mV (D2h) Range: 4200mV-65000mV (D2h-CB2h) Clamped Low Clamped High Bit Step: 20mV
1:0	RESERVED	R	0x0		Reserved

8.5.5 REG0x0A_Reverse_Mode_Input_Current_Limit Register (Address = 0xA) [Reset = 0x0640]

REG0x0A_Reverse_Mode_Input_Current_Limit is shown in Table 8-13.

Return to the Summary Table.

I2C REG0x0B=[15:8], I2C REG0x0A=[7:0]

Copyright © 2023 Texas Instruments Incorporated

Table 8-13. REG0x0A_Reverse_Mode_Input_Current_Limit Register Field Descriptions

Bit	Field	Type	Reset	Notes	Description
15:11	RESERVED	R	0x0		Reserved
10:2	IAC_REV	R/W	0x190	Reset by: REG_RESET	Input Current Regulation in Reverse Mode with 2mΩ RAC_SNS: POR: 50000mA (190h) Range: 1000mA-50000mA (8h-190h) Clamped Low Clamped High Bit Step: 125mA
1:0	RESERVED	R	0x0		Reserved

8.5.6 REG0x0C_Reverse_Mode_System_Voltage_Limit Register (Address = 0xC) [Reset = 0x03E8]

REG0x0C_Reverse_Mode_System_Voltage_Limit is shown in Table 8-14.

Return to the Summary Table.

I2C REG0x0D=[15:8], I2C REG0x0C=[7:0]

Table 8-14. REG0x0C_Reverse_Mode_System_Voltage_Limit Register Field Descriptions

Bit	Field	Type	Reset	Notes	Description
15:14	RESERVED	R	0x0		Reserved
13:2	VSYS_REV	R/W	0xFA	Reset by: REG_RESET	System Voltage Regulation in Reverse Mode: POR: 5000mV (FAh) Range: 3300mV-65000mV (A5h-CB2h) Clamped Low Clamped High Bit Step: 20mV
1:0	RESERVED	R	0x0		Reserved

8.5.7 REG0x10_Precharge_Current_Limit Register (Address = 0x10) [Reset = 0x0140]

REG0x10_Precharge_Current_Limit is shown in Table 8-15.

Return to the Summary Table.

I2C REG0x11=[15:8], I2C REG0x10=[7:0]

Table 8-15. REG0x10_Precharge_Current_Limit Register Field Descriptions

Bit	Field	Type	Reset	Notes	Description
15:10	RESERVED	R	0x0		Reserved
9:2	IPRECHG	R/W	0x50	Actual pre-charge current is the lower of IPRECHG and ICHG pin Reset by: REG_RESET	Pre-charge current regulation limit with 5mΩ RBAT_SNS: POR: 4000mA (50h) Range: 250mA-10000mA (5h-C8h) Clamped Low Clamped High Bit Step: 50mA
1:0	RESERVED	R	0x0		Reserved

8.5.8 REG0x12_Termination_Current_Limit Register (Address = 0x12) [Reset = 0x00A0]

REG0x12_Termination_Current_Limit is shown in Table 8-16.

Return to the Summary Table.

Copyright © 2023 Texas Instruments Incorporated

I2C REG0x13=[15:8], I2C REG0x12=[7:0]

Table 8-16. REG0x12_Termination_Current_Limit Register Field Descriptions

Bit	Field	Type	Reset	Notes	Description
15:10	RESERVED	R	0x0		Reserved
9:2	ITERM	R/W	0x28	Actual termination current is the lower of ITERM and ICHG pin if both functions enabled Reset by: REG_RESET	Termination Current Threshold with 5mΩ RBAT_SNS: POR: 2000mA (28h) Range: 250mA-10000mA (5h-C8h) Clamped Low Clamped High Bit Step: 50mA
1:0	RESERVED	R	0x0		Reserved

8.5.9 REG0x14_Precharge_and_Termination_Control Register (Address = 0x14) [Reset = 0x0F]

REG0x14_Precharge_and_Termination_Control is shown in Table 8-17.

Return to the Summary Table.

Table 8-17. REG0x14_Precharge_and_Termination_Control Register Field Descriptions

Bit	Field	Type	Reset	Notes	Description
7:4	RESERVED	R	0x0		Reserved
3	EN_TERM	R/W	0x1	Reset by: REG_RESET	Enable termination control 0b = Disable 1b = Enable
2:1	VBAT_LOWV	R/W	0x3	Reset by: REG_RESET	Battery threshold for PRECHG to FASTCHG transition, as percentage of VFB_REG: 00b = 30% x VFB_REG 01b = 55% x VFB_REG 10b = 66.7% x VFB_REG 11b = 71.4% x VFB_REG
0	EN_PRECHG	R/W	0x1	Reset by: REG_RESET	Enable pre-charge and trickle charge functions: 0b = Disable 1b = Enable

8.5.10 REG0x15_Timer_Control Register (Address = 0x15) [Reset = 0x1D]

REG0x15_Timer_Control is shown in Table 8-18.

Return to the Summary Table.

Table 8-18. REG0x15_Timer_Control Register Field Descriptions

Bit	Field	Type	Reset	Notes	Description
7:6	TOPOFF_TMR	R/W	0x0	Reset by: REG_RESET	Top-off timer control: 00b = Disable 01b = 15 mins 10b = 30 mins 11b = 45 mins
5:4	WATCHDOG	R/W	0x1	Reset by: REG_RESET	Watchdog timer control: 00b = Disable 01b = 40s 10b = 80s 11b = 160s
3	EN_CHG_TMR	R/W	0x1	Reset by: REG_RESET WATCHDOG	Enable charge safety timer: 0b = Disable 1b = Enable

Copyright © 2023 Texas Instruments Incorporated

Table 8-18. REG0x15_Timer_Control Register Field Descriptions (continued)

Bit	Field	Type	Reset	Notes	Description
2:1	CHG_TMR	R/W	0x2	Reset by: REG_RESET	Charge safety timer setting: 00b = 5hr 01b = 8hr 10b = 12hr 11b = 24hr
0	EN_TMR2X	R/W	0x1	Reset by: REG_RESET	Charge safety timer speed in DPM: 0b = Timer always counts normally 1b = Timer slowed by 2x during input DPM

8.5.11 REG0x16_Three-Stage_Charge_Control Register (Address = 0x16) [Reset = 0x00]

REG0x16_Three-Stage_Charge_Control is shown in Table 8-19.

Return to the Summary Table.

Table 8-19. REG0x16_Three-Stage_Charge_Control Register Field Descriptions

Bit	Field	Type	Reset	Notes	Description
7:6	RESERVED	R	0x0		Reserved
5	RESERVED	R	0x0		Reserved
4	RESERVED	R	0x0		Reserved
3:0	CV_TMR	R/W	0x0	Reset by: REG_RESET WATCHDOG	CV timer setting: 0000b = disable 0001b = 1hr 0010b = 2hr ... = ... 1110b = 14hr 1111b = 15hr

8.5.12 REG0x17_Charger_Control Register (Address = 0x17) [Reset = 0xC9]

REG0x17_Charger_Control is shown in Table 8-20.

Return to the Summary Table.

Table 8-20. REG0x17_Charger_Control Register Field Descriptions

Bit	Field	Type	Reset	Notes	Description
7:6	VRECHG	R/W	0x3	Reset by: REG_RESET	Battery auto-recharge threshold, as percentage of VFB_REG: 00b = 93.0% x VFB_REG 01b = 94.3% x VFB_REG 10b = 95.2% x VFB_REG 11b = 97.6% x VFB_REG
5	WD_RST	R/W	0x0	Reset by: REG_RESET	I2C Watchdog timer reset control: 0b = Normal 1b = Reset (bit goes back to 0 after timer reset)
4	DIS_CE_PIN	R/W	0x0	Reset by: REG_RESET	/CE pin function disable: 0b = /CE pin enabled 1b = /CE pin disabled
3	EN_CHG_BIT_RESET_BEHAVIOR	R/W	0x1	Reset by: REG_RESET	Controls the EN_CHG bit behavior when WATCHDOG expires: 0b = EN_CHG bit resets to 0 1b = EN_CHG bit resets to 1

Copyright © 2023 Texas Instruments Incorporated

Table 8-20. REG0x17_Charger_Control Register Field Descriptions (continued)

Bit	Field	Type	Reset	Notes	Description
2	EN_HIZ	R/W	0x0	Reset by: REG_RESET WATCHDOG Adapter Plug In	HIZ mode enable: 0b = Disable 1b = Enable
1	EN_IBAT_LOAD	R/W	0x0	Sinks current from SRN to GND. Recommend to disable IBAT ADC (IBAT_ADC_DIS = 1) while this bit is active. Reset by: REG_RESET WATCHDOG	Battery Load (IBAT_LOAD) Enable: 0b = Disabled 1b = Enabled
0	EN_CHG	R/W	0x1	Reset by: REG_RESET WATCHDOG	Charge enable control: 0b = Disable 1b = Enable

8.5.13 REG0x18_Pin_Control Register (Address = 0x18) [Reset = 0xC0]

REG0x18_Pin_Control is shown in Table 8-21.

Return to the Summary Table.

Table 8-21. REG0x18_Pin_Control Register Field Descriptions

Bit	Field	Type	Reset	Notes	Description
7	EN_ICHG_PIN	R/W	0x1	Reset by: REG_RESET WATCHDOG	ICHG pin function enable: 0b = ICHG pin disabled 1b = ICHG pin enabled
6	EN_ILIM_HIZ_PIN	R/W	0x1	Reset by: REG_RESET WATCHDOG	ILIM_HIZ pin function enable: 0b = ILIM_HIZ pin disabled 1b = ILIM_HIZ pin enabled
5	DIS_PG_PIN	R/W	0x0	Reset by: REG_RESET	PG pin function disable: 0b = PG pin enabled 1b = PG pin disabled
4	DIS_STAT_PINS	R/W	0x0	Reset by: REG_RESET	STAT1, STAT2 pin function disable: 0b = STAT pins enabled 1b = STAT pins disabled
3	FORCE_STAT4_ON	R/W	0x0	Reset by: REG_RESET	CE_STAT4 pin override: Can only be forced on if DIS_CE_PIN = 1 0b = CE_STAT4 open-drain off 1b = CE_STAT4 pulls LOW
2	FORCE_STAT3_ON	R/W	0x0	Reset by: REG_RESET	PG_STAT3 pin override: Can only be forced on if DIS_PG_PIN = 1 0b = PG_STAT3 open-drain off 1b = PG_STAT3 pulls LOW
1	FORCE_STAT2_ON	R/W	0x0	Reset by: REG_RESET	STAT2 pin override: Can only be forced on if DIS_STAT_PINS = 1 0b = STAT2 open-drain off 1b = STAT2 pulls LOW
0	FORCE_STAT1_ON	R/W	0x0	Reset by: REG_RESET	STAT1 pin override: Can only be forced on if DIS_STAT_PINS = 1 0b = STAT1 open-drain off 1b = STAT1 pulls LOW

Copyright © 2023 Texas Instruments Incorporated

8.5.14 REG0x19_Power_Path_and_Reverse_Mode_Control Register (Address = 0x19) [Reset = 0x20]

REG0x19_Power_Path_and_Reverse_Mode_Control is shown in Table 8-22.

Return to the Summary Table.

Table 8-22. REG0x19_Power_Path_and_Reverse_Mode_Control Register Field Descriptions

Bit	Field	Type	Reset	Notes	Description
7	REG_RST	R/W	0x0	Reset by: REG_RESET	Register reset to default values: 0b = Not reset 1b = Reset (bit goes back to 0 after register reset)
6	EN_IAC_LOAD	R/W	0x0	Reset by: REG_RESET WATCHDOG	VAC Load (IAC_LOAD) Enable: 0b = Disabled 1b = Enabled
5	EN_PFM	R/W	0x1	It is recommended to disable PFM when ITERM < 2A Reset by: REG_RESET	Enable PFM mode in light-load: Note this bit is reset upon a valid SYNC signal detection on FSW_SYNC pin. Host can set this bit back to 1 to force PFM operation even with a valid SYNC input 0b = Disable (Fixed-frequency DCM operation) 1b = Enable (PFM operation)
4	FORCE_BATFET_OFF	R/W	0x0	Reset by: REG_RESET Adapter Plug In	Force BATFET off control: 0b = Allow normal BATFET operation 1b = Force BATFET off
3	PWRPATH_REDUCE_VDRV	R/W	0x0	Reset by: REG_RESET WATCHDOG	Power-Path (ACFET, BATFET) Drive Voltage Select: 0b = 10V 1b = 7V
2	EN_BATFET_IDEAL_DIODE	R/W	0x0	Reset by: REG_RESET	Enable BATFET ideal diode turn-on mode: Note: Only recommended for single BATFET 0b = Disable 1b = Enable
1	EN_AUTO_REV	R/W	0x0	To exit reverse mode, it is recommended to clear both EN_AUTO_REV and EN_REV bits Reset by: REG_RESET WATCHDOG	Auto Reverse Mode to regulate SYS when VBAT < VSYS_REV register: 0b = Disable Auto Reverse 1b = Enable Auto Reverse
0	EN_REV	R/W	0x0	To exit reverse mode, it is recommended to clear both EN_AUTO_REV and EN_REV bits Reset by: REG_RESET WATCHDOG Adapter Plug In	Reverse Mode control: 0b = Disable 1b = Enable

8.5.15 REG0x1A_MPPT_Control Register (Address = 0x1A) [Reset = 0x20]

REG0x1A_MPPT_Control is shown in Table 8-23.

Return to the Summary Table.

Table 8-23. REG0x1A_MPPT_Control Register Field Descriptions

Bit	Field	Type	Reset	Notes	Description
7	FORCE_SWEEP	R/W	0x0	Reset by: REG_RESET	Force Full Panel Sweep and reset MPPT timers: 0b = Normal 1b = Start Full Panel Sweep (bit goes back to 0 after Full Panel Sweep complete)

Copyright © 2023 Texas Instruments Incorporated

Table 8-23. REG0x1A_MPPT_Control Register Field Descriptions (continued)

Bit	Field	Type	Reset	Notes	Description
6:3	RESERVED	R	0x0		Reserved
2:1	FULL_SWEEP_TMR	R/W	0x0	Reset by: REG_RESET	Full Panel Sweep timer control: 00b = 3 min 01b = 10 min 10b = 15 min 11b = 20 min
0	EN_MPPT	R/W	0x0	When MPPT is enabled, the ADC is controlled by the device, writes to REG2A are ignored Reset by: REG_RESET	MPPT algorithm control: 0b = Disable MPPT 1b = Enable MPPT

8.5.16 REG0x1B_TS_Charging_Threshold_Control Register (Address = 0x1B) [Reset = 0x96]

REG0x1B_TS_Charging_Threshold_Control is shown in Table 8-24.

Return to the Summary Table.

Table 8-24. REG0x1B_TS_Charging_Threshold_Control Register Field Descriptions

Bit	Field	Type	Reset	Notes	Description
7:6	TS_T5	R/W	0x2	Reset by: REG_RESET	TS T5 (HOT) threshold control: 00b = 41.2% (50C) 01b = 37.7% (55C) 10b = 34.375% (60C) 11b = 31.25%(65C)
5:4	TS_T3	R/W	0x1	Reset by: REG_RESET	JEITA TS T3 (WARM) threshold control: 00b = 48.4% (40C) 01b = 44.8% (45C) 10b = 41.2% (50C) 11b = 37.7% (55C)
3:2	TS_T2	R/W	0x1	Reset by: REG_RESET	JEITA TS T2 (COOL) threshold control: 00b = 71.1% (5C) 01b = 68.4% (10C) 10b = 65.5% (15C) 11b = 62.4% (20C)
1:0	TS_T1	R/W	0x2	Reset by: REG_RESET	TS T1 (COLD) threshold control: 00b = 77.15% (-10C) 01b = 75.32% (-5C) 10b = 73.25% (0C) 11b = 71.1% (5C)

8.5.17 REG0x1C_TS_Charging_Region_Behavior_Control Register (Address = 0x1C) [Reset = 0x57]

REG0x1C_TS_Charging_Region_Behavior_Control is shown in Table 8-25.

Return to the Summary Table.

Table 8-25. REG0x1C_TS_Charging_Region_Behavior_Control Register Field Descriptions

Bit	Field	Type	Reset	Notes	Description
7	RESERVED	R	0x0		Reserved

Copyright © 2023 Texas Instruments Incorporated

Table 8-25. REG0x1C_TS_Charging_Region_Behavior_Control Register Field Descriptions (continued)

Bit	Field	Type	Reset	Notes	Description
6:5	JEITA_VSET	R/W	0x2	Reset by: REG_RESET	JEITA Warm (T3 < TS < T5) regulation voltage setting, as percentage of VFB_REG: 00b = Charge Suspend 01b = 94.3% x VFB_REG 10b = 97.6% x VFB_REG 11b = 100% x VFB_REG
4	JEITA_ISETH	R/W	0x1	Reset by: REG_RESET	JEITA Warm (T3 < TS < T5) regulation current setting, as percentage of ICHG_REG: 0b = 40% x ICHG_REG 1b = 100% x ICHG_REG
3:2	JEITA_ISETC	R/W	0x1	Reset by: REG_RESET	JEITA Cool (T1 < TS < T2) regulation current setting, as percentage of ICHG_REG: 00b = Charge Suspend 01b = 20% x ICHG_REG 10b = 40% x ICHG_REG 11b = 100% x ICHG_REG
1	EN_JEITA	R/W	0x1	EN_VREG_TEMP_COMP and EN_JEITA cannot be set to 1 at the same time. Reset by: REG_RESET	JEITA profile control: 0b = Disabled (COLD/HOT control only) 1b = Enabled (COLD/COOL/WARM/HOT control)
0	EN_TS	R/W	0x1	Reset by: REG_RESET	TS pin function control (applies to forward charging and reverse discharging modes): 0b = Disabled (ignore TS pin) 1b = Enabled

8.5.18 REG0x1D_TS_Reverse_Mode_Threshold_Control Register (Address = 0x1D) [Reset = 0x40]

REG0x1D_TS_Reverse_Mode_Threshold_Control is shown in Table 8-26.

Return to the Summary Table.

Table 8-26. REG0x1D_TS_Reverse_Mode_Threshold_Control Register Field Descriptions

Bit	Field	Type	Reset	Notes	Description
7:6	BHOT	R/W	0x1	Reset by: REG_RESET	Reverse Mode TS HOT temperature threshold control: 00b = 37.7% (55C) 01b = 34.2% (60C) 10b = 31.25%(65C) 11b = Disable
5	BCOLD	R/W	0x0	Reset by: REG_RESET	Reverse Mode TS COLD temperature threshold control: 0b = 77.15% (-10C) 1b = 80% (-20C)
4:0	RESERVED	R	0x0		Reserved

8.5.19 REG0x1E_Reverse_Undervoltage_Control Register (Address = 0x1E) [Reset = 0x00]

REG0x1E_Reverse_Undervoltage_Control is shown in Table 8-27.

Return to the Summary Table.

Table 8-27. REG0x1E_Reverse_Undervoltage_Control Register Field Descriptions

Bit	Field	Type	Reset	Notes	Description
7	RESERVED	R	0x0		Reserved
6	RESERVED	R	0x0		Reserved

Copyright © 2023 Texas Instruments Incorporated

Table 8-27. REG0x1E_Reverse_Undervoltage_Control Register Field Descriptions (continued)

Bit	Field	Type	Reset	Notes	Description
5	SYSREV_UV	R/W	0x0	Reset by: REG_RESET	Reverse Mode System UVP: 0b = 80% of VSYS_REV target 1b = Fixed at 3.3V
4	RESERVED	R	0x0		Reserved
3	RESERVED	R	0x0		Reserved
2	RESERVED	R	0x0		Reserved
1	RESERVED	R	0x0		Reserved
0	RESERVED	R	0x0		Reserved

8.5.20 REG0x1F_VAC_Max_Power_Point_Detected Register (Address = 0x1F) [Reset = 0x0000]

REG0x1F_VAC_Max_Power_Point_Detected is shown in Table 8-28.

Return to the Summary Table.

I2C REG0x20=[15:8], I2C REG0x1F=[7:0]

Table 8-28. REG0x1F_VAC_Max_Power_Point_Detected Register Field Descriptions

Bit	Field	Type	Reset	Notes	Description
15:14	RESERVED	R	0x0		Reserved
13:2	VAC_MPP	R	0x0		Input Voltage for Max Power Point detected: POR: 0mV (0h) Range: 0mV-60000mV (0h-BB8h) Clamped High Bit Step: 20mV
1:0	RESERVED	R	0x0		Reserved

8.5.21 REG0x21_Charger_Status_1 Register (Address = 0x21) [Reset = 0x00]

REG0x21_Charger_Status_1 is shown in Table 8-29.

Return to the Summary Table.

Table 8-29. REG0x21_Charger_Status_1 Register Field Descriptions

Bit	Field	Type	Reset	Notes	Description
7	ADC_DONE_STAT	R	0x0		ADC conversion status (in one-shot mode only): 0b = Conversion not complete 1b = Conversion complete
6	IAC_DPM_STAT	R	0x0		Input Current regulation status: 0b = Normal 1b = In Input Current regulation (ILIM pin or IAC_DPM)
5	VAC_DPM_STAT	R	0x0		Input Voltage regulation status: 0b = Normal 1b = In Input Voltage regulation (VAC_DPM or VSYS_REV)
4	RESERVED	R	0x0		Reserved
3	WD_STAT	R	0x0		I2C Watchdog timer status: 0b = Normal 1b = WD timer expired

Copyright © 2023 Texas Instruments Incorporated

Table 8-29. REG0x21_Charger_Status_1 Register Field Descriptions (continued)

Bit	Field	Type	Reset	Notes	Description
2:0	CHARGE_STAT	R	0x0		Charge cycle status: 000b = Not charging 001b = Trickle Charge (VBAT < VBAT_SHORT) 010b = Pre-Charge (VBAT < VBAT_LOWV) 011b = Fast Charge (CC mode) 100b = Taper Charge (CV mode) 101b = Reserved 110b = Top-off Timer Charge 111b = Charge Termination Done

8.5.22 REG0x22_Charger_Status_2 Register (Address = 0x22) [Reset = 0x00]

REG0x22_Charger_Status_2 is shown in Table 8-30.

Return to the Summary Table.

Table 8-30. REG0x22_Charger_Status_2 Register Field Descriptions

Bit	Field	Type	Reset	Notes	Description
7	PG_STAT	R	0x0		Input Power Good status: 0b = Not Power Good 1b = Power Good
6:4	TS_STAT	R	0x0		TS (Battery NTC) status: 000b = Normal 001b = TS Warm 010b = TS Cool 011b = TS Cold 100b = TS Hot
3:2	RESERVED	R	0x0		Reserved
1:0	MPPT_STAT	R	0x0		Max Power Point Tracking Algorithm status: 00b = MPPT Disabled 01b = MPPT Enabled, But Not Running 10b = Full Panel Sweep In Progress 11b = Max Power Voltage Detected

8.5.23 REG0x23_Charger_Status_3 Register (Address = 0x23) [Reset = 0x00]

REG0x23_Charger_Status_3 is shown in Table 8-31.

Return to the Summary Table.

Table 8-31. REG0x23_Charger_Status_3 Register Field Descriptions

Bit	Field	Type	Reset	Notes	Description
7:6	RESERVED	R	0x0		Reserved
5:4	FSW_SYNC_STAT	R	0x0		FSW_SYNC pin status: 00b = Normal, no external clock detected 01b = Valid ext. clock detected 10b = Pin fault (frequency out-of-range) 11b = Reserved
3	CV_TMR_STAT	R	0x0		CV Timer status: 0b = Normal 1b = CV Timer Expired
2	REVERSE_STAT	R	0x0		Converter Reverse Mode status: 0b = Reverse Mode off 1b = Reverse Mode On

Copyright © 2023 Texas Instruments Incorporated

Table 8-31. REG0x23_Charger_Status_3 Register Field Descriptions (continued)

Bit	Field	Type	Reset	Notes	Description
1	ACFET_STAT	R	0x0		ACFET driver status: 0b = ACFET off 1b = ACFET on
0	BATFET_STAT	R	0x0		BATFET driver status: 0b = BATFET off 1b = BATFET on

8.5.24 REG0x24_Fault_Status Register (Address = 0x24) [Reset = 0x00]

REG0x24_Fault_Status is shown in Table 8-32.

Return to the Summary Table.

Table 8-32. REG0x24_Fault_Status Register Field Descriptions

Bit	Field	Type	Reset	Notes	Description
7	VAC_UV_STAT	R	0x0		Input under-voltage status: 0b = Input Normal 1b = Device in Input under-voltage protection
6	VAC_OV_STAT	R	0x0		Input over-voltage status: 0b = Input Normal 1b = Device in Input over-voltage protection
5	IBAT_OCP_STAT	R	0x0		Battery over-current status: 0b = Battery current normal 1b = Battery over-current detected
4	VBAT_OV_STAT	R	0x0		Battery over-voltage status: 0b = Normal 1b = Device in Battery over-voltage protection
3	TSHUT_STAT	R	0x0		Thermal shutdown status: 0b = Normal 1b = Device in thermal shutdown protection
2	CHG_TMR_STAT	R	0x0		Charge safety timer status: 0b = Normal 1b = Charge safety timer expired
1	DRV_OKZ_STAT	R	0x0	In battery-only mode with ADC disabled, this bit always reads '1'	DRV_SUP pin voltage status: 0b = Normal 1b = DRV_SUP pin voltage is out of valid range
0	RESERVED	R	0x0		Reserved

8.5.25 REG0x25_Charger_Flag_1 Register (Address = 0x25) [Reset = 0x00]

REG0x25_Charger_Flag_1 is shown in Table 8-33.

Return to the Summary Table.

Table 8-33. REG0x25_Charger_Flag_1 Register Field Descriptions

Bit	Field	Type	Reset	Notes	Description
7	ADC_DONE_FLAG	R	0x0		ADC conversion INT flag (in one-shot mode only): Note: always reads 0 in continuous mode Access: R (ClearOnRead) 0b = Conversion not complete 1b = Conversion complete

Copyright © 2023 Texas Instruments Incorporated

Table 8-33. REG0x25_Charger_Flag_1 Register Field Descriptions (continued)

Bit	Field	Type	Reset	Notes	Description
6	IAC_DPM_FLAG	R	0x0		Input Current regulation INT flag: Access: R (ClearOnRead) 0b = Normal 1b = Device entered Input Current regulation
5	VAC_DPM_FLAG	R	0x0		Input Voltage regulation INT flag: Access: R (ClearOnRead) 0b = Normal 1b = Device entered Input Voltage regulation
4	RESERVED	R	0x0		Reserved
3	WD_FLAG	R	0x0		I2C Watchdog timer INT flag: Access: R (ClearOnRead) 0b = Normal 1b = WD_STAT rising edge detected
2	RESERVED	R	0x0		Reserved
1	CV_TMR_FLAG	R	0x0		CV timer INT flag: Access: R (ClearOnRead) 0b = Normal 1b = CV timer expired rising edge detected
0	CHARGE_FLAG	R	0x0		Charge cycle INT flag: Access: R (ClearOnRead) 0b = Not charging 1b = CHARGE_STAT[2:0] bits changed (transition to any state)

8.5.26 REG0x26_Charger_Flag_2 Register (Address = 0x26) [Reset = 0x00]

REG0x26_Charger_Flag_2 is shown in Table 8-34.

Return to the Summary Table.

Table 8-34. REG0x26_Charger_Flag_2 Register Field Descriptions

Bit	Field	Type	Reset	Notes	Description
7	PG_FLAG	R	0x0		Input Power Good INT flag: Access: R (ClearOnRead) 0b = Normal 1b = PG signal toggle detected
6	ACFET_FLAG	R	0x0		ACFET driver INT flag: Access: R (ClearOnRead) 0b = Normal 1b = ACFET signal toggle detected
5	BATFET_FLAG	R	0x0		BATFET driver INT flag: Access: R (ClearOnRead) 0b = Normal 1b = BATFET signal toggle detected
4	TS_FLAG	R	0x0		TS (Battery NTC) INT flag: Access: R (ClearOnRead) 0b = Normal 1b = TS_STAT[2:0] bits changed (transitioned to any state)
3	REVERSE_FLAG	R	0x0		Reverse Mode INT flag: Access: R (ClearOnRead) 0b = Normal 1b = Reverse Mode toggle detected

Copyright © 2023 Texas Instruments Incorporated

Table 8-34. REG0x26_Charger_Flag_2 Register Field Descriptions (continued)

Bit	Field	Type	Reset	Notes	Description
2	RESERVED	R	0x0		Reserved
1	FSW_SYNC_FLAG	R	0x0		FSW_SYNC pin signal INT flag: Access: R (ClearOnRead) 0b = Normal 1b = FSW_SYNC status changed
0	MPPT_FLAG	R	0x0		Max Power Point Tracking INT flag: Access: R (ClearOnRead) 0b = Normal 1b = MPPT_STAT[1:0] bits changed (transitioned to any state)

8.5.27 REG0x27_Fault_Flag Register (Address = 0x27) [Reset = 0x00]

REG0x27_Fault_Flag is shown in Table 8-35.

Return to the Summary Table.

Table 8-35. REG0x27_Fault_Flag Register Field Descriptions

Bit	Field	Type	Reset	Notes	Description
7	VAC_UV_FLAG	R	0x0		Input under-voltage INT flag: Access: R (ClearOnRead) 0b = Normal 1b = Entered input under-voltage fault
6	VAC_OV_FLAG	R	0x0		Input over-voltage INT flag: Access: R (ClearOnRead) 0b = Normal 1b = Entered Input over-voltage fault
5	IBAT_OCP_FLAG	R	0x0		Battery over-current INT flag: Access: R (ClearOnRead) 0b = Normal 1b = Entered Battery over-current fault
4	VBAT_OV_FLAG	R	0x0		Battery over-voltage INT flag: Access: R (ClearOnRead) 0b = Normal 1b = Entered battery over-voltage fault
3	TSHUT_FLAG	R	0x0		Thermal shutdown INT flag: Access: R (ClearOnRead) 0b = Normal 1b = Entered TSHUT fault
2	CHG_TMR_FLAG	R	0x0		Charge safety timer INT flag: Access: R (ClearOnRead) 0b = Normal 1b = Charge Safety timer expired rising edge detected
1	DRV_OKZ_FLAG	R	0x0		DRV_SUP pin voltage INT flag: Access: R (ClearOnRead) 0b = Normal 1b = DRV_SUP pin fault detected
0	RESERVED	R	0x0		Reserved

8.5.28 REG0x28_Charger_Mask_1 Register (Address = 0x28) [Reset = 0x00]

REG0x28_Charger_Mask_1 is shown in Table 8-36.

Copyright © 2023 Texas Instruments Incorporated

Return to the Summary Table.

Table 8-36. REG0x28_Charger_Mask_1 Register Field Descriptions

Bit	Field	Type	Reset	Notes	Description
7	ADC_DONE_MASK	R/W	0x0	Reset by: REG_RESET	ADC conversion INT mask (in one-shot mode only): 0b = ADC_DONE produces INT pulse 1b = ADC_DONE does not produce INT pulse
6	IAC_DPM_MASK	R/W	0x0	Reset by: REG_RESET	Input Current regulation INT mask: 0b = IAC_DPM_FLAG produces INT pulse 1b = IAC_DPM_FLAG does not produce INT pulse
5	VAC_DPM_MASK	R/W	0x0	Reset by: REG_RESET	Input Voltage regulation INT mask: 0b = VAC_DPM_FLAG produces INT pulse 1b = VAC_DPM_FLAG does not produce INT pulse
4	RESERVED	R	0x0		Reserved
3	WD_MASK	R/W	0x0	Reset by: REG_RESET	I2C Watchdog timer INT mask: 0b = WD expiration produces INT pulse 1b = WD expiration does not produce INT pulse
2	RESERVED	R	0x0		Reserved
1	CV_TMR_MASK	R/W	0x0	Reset by: REG_RESET	CV timer INT mask: 0b = CV Timer expired rising edge produces INT pulse 1b = CV Timer expired rising edge does not produce INT pulse
0	CHARGE_MASK	R/W	0x0	Reset by: REG_RESET	Charge cycle INT mask: 0b = CHARGE_STAT change produces INT pulse 1b = CHARGE_STAT change does not produces INT pulse

8.5.29 REG0x29_Charger_Mask_2 Register (Address = 0x29) [Reset = 0x00]

REG0x29_Charger_Mask_2 is shown in Table 8-37.

Return to the Summary Table.

Table 8-37. REG0x29_Charger_Mask_2 Register Field Descriptions

Bit	Field	Type	Reset	Notes	Description
7	PG_MASK	R/W	0x0	Reset by: REG_RESET	Input Power Good INT mask: 0b = PG toggle produces INT pulse 1b = PG toggle does not produce INT pulse
6	ACFET_MASK	R/W	0x0	Reset by: REG_RESET	ACFET driver INT mask: 0b = ACFET toggle produces INT pulse 1b = ACFET toggle does not produce INT pulse
5	BATFET_MASK	R/W	0x0	Reset by: REG_RESET	BATFET driver INT mask: 0b = BATFET toggle produces INT pulse 1b = BATFET toggle does not produce INT pulse
4	TS_MASK	R/W	0x0	Reset by: REG_RESET	TS (Battery NTC) INT mask: 0b = TS_STAT change produces INT pulse 1b = TS_STAT change does not produce INT pulse
3	REVERSE_MASK	R/W	0x0	Reset by: REG_RESET	Reverse Mode INT mask: 0b = REVERSE_STAT toggle produces INT pulse 1b = REVERSE_STAT toggle does no produce INT pulse
2	RESERVED	R	0x0		Reserved

Copyright © 2023 Texas Instruments Incorporated

Table 8-37. REG0x29_Charger_Mask_2 Register Field Descriptions (continued)

Bit	Field	Type	Reset	Notes	Description
1	FSW_SYNC_MASK	R/W	0x0	Reset by: REG_RESET	FSW_SYNC pin signal INT mask: 0b = FSW_SYNC status change produces INT pulse 1b = FSW_SYNC status change does not produce INT pulse
0	MPPT_MASK	R/W	0x0	Reset by: REG_RESET	Max Power Point Tracking INT mask: 0b = MPPT_STAT rising edge produces INT pulse 1b = MPPT_STAT rising edge does no produce INT pulse

8.5.30 REG0x2A_Fault_Mask Register (Address = 0x2A) [Reset = 0x00]

REG0x2A_Fault_Mask is shown in Table 8-38.

Return to the Summary Table.

Table 8-38. REG0x2A_Fault_Mask Register Field Descriptions

Bit	Field	Type	Reset	Notes	Description
7	VAC_UV_MASK	R/W	0x0	Reset by: REG_RESET	Input under-voltage INT mask: 0b = Input under-voltage event produces INT pulse 1b = Input under-voltage event does not produce INT pulse
6	VAC_OV_MASK	R/W	0x0	Reset by: REG_RESET	Input over-voltage INT mask: 0b = Input over-voltage event produces INT pulse 1b = Input over-voltage event does not produce INT pulse
5	IBAT_OCP_MASK	R/W	0x0	Reset by: REG_RESET	Battery over-current INT mask: 0b = Battery over-current event produces INT pulse 1b = Battery over-current event does not produce INT pulse
4	VBAT_OV_MASK	R/W	0x0	Reset by: REG_RESET	Battery over-voltage INT mask: 0b = Battery over-voltage event produces INT pulse 1b = Battery over-voltage event does not produce INT pulse
3	TSHUT_MASK	R/W	0x0	Reset by: REG_RESET	Thermal shutdown INT mask: 0b = TSHUT event produces INT pulse 1b = TSHUT event does not produce INT pulse
2	CHG_TMR_MASK	R/W	0x0	Reset by: REG_RESET	Charge safety timer INT mask: 0b = Timer expired rising edge produces INT pulse 1b = Timer expired rising edge does not produce INT pulse
1	DRV_OKZ_MASK	R/W	0x0	Reset by: REG_RESET	DRV_SUP pin voltage INT mask: 0b = DRV_SUP pin fault produces INT pulse 1b = DRV_SUP pin fault does not produce INT pulse
0	RESERVED	R	0x0		Reserved

8.5.31 REG0x2B_ADC_Control Register (Address = 0x2B) [Reset = 0x60]

REG0x2B_ADC_Control is shown in Table 8-39.

Return to the Summary Table.

Copyright © 2023 Texas Instruments Incorporated

Table 8-39. REG0x2B_ADC_Control Register Field Descriptions

Bit	Field	Type	Reset	Notes	Description
7	ADC_EN	R/W	0x0	When EN_VREG_TEMP_COMP = 1, the ADC will be automatically enabled, regardless of the status of ADC_EN Reset by: REG_RESET WATCHDOG	ADC control: 0b = Disable ADC 1b = Enable ADC
6	ADC_RATE	R/W	0x1	Reset by: REG_RESET	ADC conversion rate control: 0b = Continuous conversion 1b = One-shot conversion
5:4	ADC_SAMPLE	R/W	0x2	Reset by: REG_RESET	ADC sample speed: 00b = 15 bit effective resolution 01b = 14 bit effective resolution 10b = 13 bit effective resolution 11b = Reserved
3	ADC_AVG	R/W	0x0	Reset by: REG_RESET	ADC average control: 0b = Single value 1b = Running average
2	ADC_AVG_INIT	R/W	0x0	Reset by: REG_RESET	ADC average initial value control: 0b = Start average using existing register value 1b = Start average using new ADC conversion
1:0	RESERVED	R	0x0		Reserved

8.5.32 REG0x2C_ADC_Channel_Control Register (Address = 0x2C) [Reset = 0x02]

REG0x2C_ADC_Channel_Control is shown in Table 8-40.

Return to the Summary Table.

Table 8-40. REG0x2C_ADC_Channel_Control Register Field Descriptions

Bit	Field	Type	Reset	Notes	Description
7	IAC_ADC_DIS	R/W	0x0	Reset by: REG_RESET	IAC ADC control 0b = Enable 1b = Disable
6	IBAT_ADC_DIS	R/W	0x0	Recommend to disable IBAT ADC channel when EN_IBAT_LOAD bit is 1 Reset by: REG_RESET	IBAT ADC control 0b = Enable 1b = Disable
5	VAC_ADC_DIS	R/W	0x0	Reset by: REG_RESET	VAC ADC control 0b = Enable 1b = Disable
4	VBAT_ADC_DIS	R/W	0x0	Reset by: REG_RESET	VBAT ADC control 0b = Enable 1b = Disable
3	VSYS_ADC_DIS	R/W	0x0	Reset by: REG_RESET	VSYS ADC control 0b = Enable 1b = Disable
2	TS_ADC_DIS	R/W	0x0	Reset by: REG_RESET	TS ADC control 0b = Enable 1b = Disable

Copyright © 2023 Texas Instruments Incorporated

Table 8-40. REG0x2C_ADC_Channel_Control Register Field Descriptions (continued)

Bit	Field	Type	Reset	Notes	Description
1	VFB_ADC_DIS	R/W	0x1	Reset by: REG_RESET	VFB ADC control Recommend to disable this channel when charging is enabled 0b = Enable 1b = Disable
0	RESERVED	R	0x0		Reserved

8.5.33 REG0x2D_IAC_ADC Register (Address = 0x2D) [Reset = 0x0000]

REG0x2D_IAC_ADC is shown in Table 8-41.

Return to the Summary Table.

I2C REG0x2E=[15:8], I2C REG0x2D=[7:0]

Table 8-41. REG0x2D_IAC_ADC Register Field Descriptions

Bit	Field	Type	Reset	Notes	Description
15:0	IAC_ADC	R	0x0		IAC ADC reading with 2mΩ RAC_SNS: Reported as 2s complement POR: 0mA (0h) Format: 2s Complement Range: -50000mA-50000mA (9E58h-61A8h) Clamped Low Clamped High Bit Step: 2mA

8.5.34 REG0x2F_IBAT_ADC Register (Address = 0x2F) [Reset = 0x0000]

REG0x2F_IBAT_ADC is shown in Table 8-42.

Return to the Summary Table.

I2C REG0x30=[15:8], I2C REG0x2F=[7:0]

Table 8-42. REG0x2F_IBAT_ADC Register Field Descriptions

Bit	Field	Type	Reset	Notes	Description
15:0	IBAT_ADC	R	0x0		IBAT ADC reading with 5mΩ RBAT_SNS: Reported as 2s complement POR: 0mA (0h) Format: 2s Complement Range: -20000mA-20000mA (D8F0h-2710h) Clamped Low Clamped High Bit Step: 2mA

8.5.35 REG0x31_VAC_ADC Register (Address = 0x31) [Reset = 0x0000]

REG0x31_VAC_ADC is shown in Table 8-43.

Return to the Summary Table.

I2C REG0x32=[15:8], I2C REG0x31=[7:0]

Copyright © 2023 Texas Instruments Incorporated

Table 8-43. REG0x31_VAC_ADC Register Field Descriptions

Bit	Field	Type	Reset	Notes	Description
15:0	VAC_ADC	R	0x0		VAC ADC reading: Reported as unsigned integer POR: 0mV (0h) Format: 2s Complement Range: 0mV-65534mV (0h-7FFFh) Clamped Low Bit Step: 2mV

8.5.36 REG0x33_VBAT_ADC Register (Address = 0x33) [Reset = 0x0000]

REG0x33_VBAT_ADC is shown in Table 8-44.

Return to the Summary Table.

I2C REG0x34=[15:8], I2C REG0x33=[7:0]

Table 8-44. REG0x33_VBAT_ADC Register Field Descriptions

Bit	Field	Type	Reset	Notes	Description
15:0	VBAT_ADC	R	0x0		VBAT ADC reading: Reported as unsigned integer POR: 0mV (0h) Format: 2s Complement Range: 0mV-65534mV (0h-7FFFh) Clamped Low Bit Step: 2mV

8.5.37 REG0x35_VSYS_ADC Register (Address = 0x35) [Reset = 0x0000]

REG0x35_VSYS_ADC is shown in Table 8-45.

Return to the Summary Table.

I2C REG0x36=[15:8], I2C REG0x35=[7:0]

Table 8-45. REG0x35_VSYS_ADC Register Field Descriptions

Bit	Field	Type	Reset	Notes	Description
15:0	VSYS_ADC	R	0x0		VSYS ADC reading: Reported as unsigned integer POR: 0mV (0h) Format: 2s Complement Range: 0mV-65534mV (0h-7FFFh) Clamped Low Bit Step: 2mV

8.5.38 REG0x37_TS_ADC Register (Address = 0x37) [Reset = 0x0000]

REG0x37_TS_ADC is shown in Table 8-46.

Return to the Summary Table.

I2C REG0x38=[15:8], I2C REG0x37=[7:0]

Copyright © 2023 Texas Instruments Incorporated

Table 8-46. REG0x37_TS_ADC Register Field Descriptions

Bit	Field	Type	Reset	Notes	Description
15:0	TS_ADC	R	0x0		TS ADC reading as percentage of REGN: Reported as unsigned integer POR: 0%(0h) Range: 0% - 99.90234375% (0h-3FFh) Clamped High Bit Step: 0.09765625%

8.5.39 REG0x39_VFB_ADC Register (Address = 0x39) [Reset = 0x0000]

REG0x39_VFB_ADC is shown in Table 8-47.

Return to the Summary Table.

I2C REG0x3A=[15:8], I2C REG0x39=[7:0]

Table 8-47. REG0x39_VFB_ADC Register Field Descriptions

Bit	Field	Type	Reset	Notes	Description
15:0	VFB_ADC	R	0x0		VFB ADC reading: POR: 0mV (0h) Range: 0mV-2047mV (0h-7FFh) Clamped High Bit Step: 1mV

8.5.40 REG0x3B_Gate_Driver_Strength_Control Register (Address = 0x3B) [Reset = 0x00]

REG0x3B_Gate_Driver_Strength_Control is shown in Table 8-48.

Return to the Summary Table.

Table 8-48. REG0x3B_Gate_Driver_Strength_Control Register Field Descriptions

Bit	Field	Type	Reset	Notes	Description
7:6	BOOST_HS_DRV	R/W	0x0	Reset by: REG_RESET	Boost High Side FET Gate Driver Strength: 00b = Fastest 01b = Faster 10b = Slower 11b = Slowest
5:4	BUCK_HS_DRV	R/W	0x0	Reset by: REG_RESET	Buck High Side FET Gate Driver Strength: 00b = Fastest 01b = Faster 10b = Slower 11b = Slowest
3:2	BOOST_LS_DRV	R/W	0x0	Reset by: REG_RESET	Boost Low Side FET Gate Driver Strength: 00b = Fastest 01b = Faster 10b = Slower 11b = Slowest
1:0	BUCK_LS_DRV	R/W	0x0	Reset by: REG_RESET	Buck Low Side FET Gate Driver Strength: 00b = Fastest 01b = Faster 10b = Slower 11b = Slowest

Copyright © 2023 Texas Instruments Incorporated

8.5.41 REG0x3C_Gate_Driver_Dead_Time_Control Register (Address = 0x3C) [Reset = 0x00]

REG0x3C_Gate_Driver_Dead_Time_Control is shown in Table 8-49.

Return to the Summary Table.

Table 8-49. REG0x3C_Gate_Driver_Dead_Time_Control Register Field Descriptions

Bit	Field	Type	Reset	Notes	Description
7:4	RESERVED	R	0x0		Reserved
3:2	BOOST_DEAD_TIME	R/W	0x0	Reset by: REG_RESET	Boost Side FETs Dead Time Control: 00b = 45ns 01b = 75ns 10b = 105ns 11b = 135ns
1:0	BUCK_DEAD_TIME	R/W	0x0	Reset by: REG_RESET	Buck Side FETs Dead Time Control: 00b = 45ns 01b = 75ns 10b = 105ns 11b = 135ns

8.5.42 REG0x3D_Part_Information Register (Address = 0x3D) [Reset = 0x02]

REG0x3D_Part_Information is shown in Table 8-50.

Return to the Summary Table.

Table 8-50. REG0x3D_Part_Information Register Field Descriptions

Bit	Field	Type	Reset	Notes	Description
7	RESERVED	R	0x0		Reserved
6:3	PART_NUM	R	0x0		Part Number: 000 - BQ25750
2:0	DEV_REV	R	0x2		Device Revision:

8.5.43 REG0x62_Reverse_Mode_Battery_Discharge_Current Register (Address = 0x62) [Reset = 0x02]

REG0x62_Reverse_Mode_Battery_Discharge_Current is shown in Table 8-51.

Return to the Summary Table.

Table 8-51. REG0x62_Reverse_Mode_Battery_Discharge_Current Register Field Descriptions

Bit	Field	Type	Reset	Notes	Description
7:6	IBAT_REV	R/W	0x0	Reset by: REG_RESET	Reverse mode battery discharge current limit: 00b = 20A 01b = 15A 10b = 10A 11b = 5A
5:2	RESERVED	R	0x0		Reserved
1	EN_CONV_FAST_TRANSIENT	R/W	0x1	Reset by: REG_RESET	Enable converter fast transient response in reverse mode only - 0b = Disable 1b = Enable
0	RESERVED	R	0x0		Reserved

Copyright © 2023 Texas Instruments Incorporated

9 Application and Implementation

Note

Information in the following applications sections is not part of the TI component specification, and TI does not warrant its accuracy or completeness. TI's customers are responsible for determining suitability of components for their purposes, as well as validating and testing their design implementation to confirm system functionality.

9.1 Application Information

The BQ25750 battery charger is ideal for high current charging (up-to 20 A) and can charge multi-chemistry battery packs consisting of single cells or multiple cells in series up-to 70 V. The BQ25750EVM evaluation module is a complete charge module for evaluating the device performance. The application curves were taken using the BQ25750EVM.

9.2 Typical Applications

9.2.1 Typical Application

The device can be configured for direct power path applications, where the input source can be used to power both system as well as charge the battery. When the input source falls outside the VAC operating window programmed through ACUV and ACOV, the battery is automatically connected to the system. Figure 9-1 shows a typical schematic when using the device as a 14S Li-Ion charger from a 48V input. The charging parameters are programmed via the I^{2}C registers.

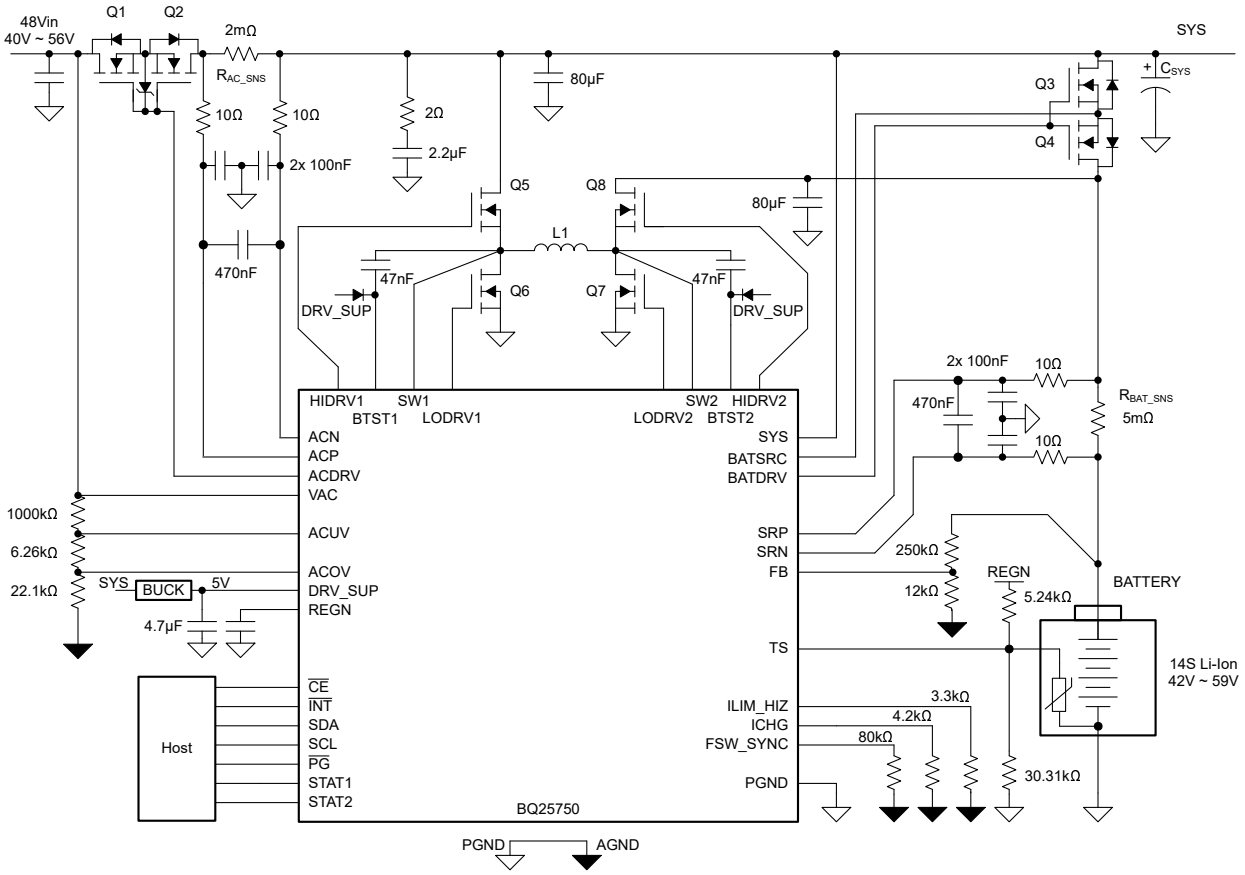

Figure 9-1. BQ25750: I^{2}C Controlled, 48 VAC with 14-S Li-Ion Battery, 10-A Charge Current and 350-kHz Switching Frequency

Copyright © 2023 Texas Instruments Incorporated

Table 9-1. Recommended Part Numbers:

COMPONENT	VALUE	RECOMMENDED PART NO.
Q1, Q2	80V, 2.6mΩ	AONS6276
Q3, Q4	80V, 2.6mΩ	AONS6276
Q5, Q6, Q7, Q8	80V, 6.5mΩ	SiR880BDP
L1	10uH	IHLP6767GZ-01

9.2.1.1 Design Requirements

For this design example, use the parameters shown in the table below.

Table 9-2. Design Parameters

PARAMETER	VALUE
Input voltage operating range (V_{AC})	40V to 56V
Input current limit (I_{AC})	12 A
Fast-charge current limit (I_{CHG})	10 A
Battery Charge Voltage (V_{BAT_REG})	58.8V
Switching frequency	350 kHz

9.2.1.2 Detailed Design Procedure

9.2.1.2.1 ACUV / ACOV Input Voltage Operating Window Programming

The input voltage operating window is programmed by an ACUV / ACOV window with a resistor divider from VAC to GND. The top resistor, RAC1 is typically selected as 1,000 kΩ to minimize the input voltage leakage current. Assuming the desired trip-points for under-voltage and over-voltage protection are labeled V_{VACUVP} and V_{VACOVP}, the resistor divider required can be calculated as follows. The internal reference for the over-voltage threshold (VREF_ACOV) is 1.2 V. The internal reference for the under-voltage threshold (VREF_ACUV) is 1.1 V.

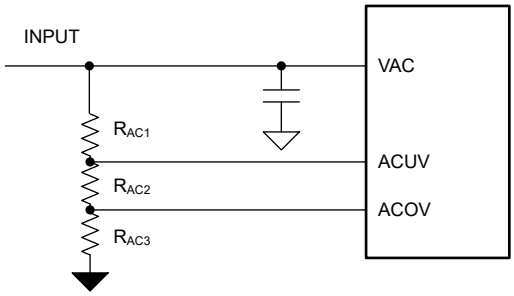

Figure 9-2. ACUV and ACOV Resistor Divider

$$V_{VACOVP} = \frac{1.2V(1{,}000k\Omega + R_{AC2} + R_{AC3})}{R_{AC3}} \quad (8)$$

$$V_{VACUVP} = \frac{1.1V(1{,}000k\Omega + R_{AC2} + R_{AC3})}{R_{AC2} + R_{AC3}} \quad (9)$$

Solving this system of equations and finding the nearest 0.1% resistor value for the desired trip-points as 40 V and 56 V for undervoltage and overvoltage yields:

R_{AC2} = 6.26 kΩ

R_{AC3} = 22.1 kΩ

The resulting overvoltage trip point can be calculated as:

V_{VACOVP} = 1.2 V (1,000 kΩ + 6.26 kΩ + 22.1 kΩ) / (22.1 kΩ) = 55.8 V

Copyright © 2023 Texas Instruments Incorporated

Similarly, the V_{VACUVP} can be calculated as: 39.9 V

Note that in addition to programming the input undervoltage threshold, the ACUV pin also programs a hardware input voltage regulation limit when the pin voltage reaches the reference (V_{ACUV_DPM}, typically 1.2 V). When the input voltage reaches this threshold, the charger will reduce charge current to regulate the ACUV pin to the 1.2 V reference. For the above example, the hardware ACUV_DPM level can be calculated as:

ACUV_DPM = 1.2 V (1,000 kΩ + 6.26 kΩ + 22.1 kΩ) / (6.26 kΩ + 22.1 kΩ) = 43.5 V

For the default device operating window of 4.2 V to 60 V, the ACUV can be pulled up directly to VAC, while the ACOV can be pulled directly to GND.

9.2.1.2.2 Charge Voltage Selection

The battery regulation voltage is programmed using a resistor divider to the FB pin. The default internal voltage reference is 1.536 V, and can be changed via the VFB_REG register bits. The top of the resistor divider is selected to be 249 kΩ.

R_{TOP} = 249 kΩ

The bottom resistor can be calculated as:

$$R_{BOT} = R_{TOP} \times \frac{V_{FB}}{V_{BATREG} - V_{FB}} + R_{FBG} \quad (10)$$

where

- V_{FB} is the target feedback voltage programmed through I^2C (default 1.536 V),
- V_{BATREG} is the desired battery regulation target (58.8 V in this example)
- R_{FBG} is the internal FBG pull-down resistor (33 Ω)

R_{FB_BOT} = 6.712 kΩ.

Choosing the nearest 0.1% resistor value, gives R_{FB_BOT} = 6.65 kΩ, for a nominal charge voltage of 58.75 V. Further fine-tuning of the regulation voltage can be achieved by changing the internal feedback reference.

It is recommended to use 0.1% accurate resistors to maximize the charge voltage accuracy.

9.2.1.2.3 Switching Frequency Selection

The switching frequency is set by a resistor connected from the FSW_SYNC pin to PGND. The RFSW resistor required to set the desired frequency is calculated using Equation 3 or Table 8-2. A 0.1% standard resistor of 80 kΩ is selected to set f_{SW} = 350 kHz.

9.2.1.2.4 Inductor Selection

Higher switching frequency allows the use of smaller inductor and capacitor values. Inductor saturation current should be higher than the inductor current (I_L) plus half the ripple current (I_{RIPPLE}):

$$I_{SAT} \geq I_L + \frac{1}{2} I_{RIPPLE} \quad (11)$$

The inductor ripple current in buck operation depends on input voltage (V_{AC}), duty cycle (D_{BUCK} = V_{BAT}/V_{AC}), switching frequency (f_{SW}) and inductance (L):

$$I_{RIPPLE_BUCK} = \frac{V_{AC} \times D_{BUCK} \times (1 - D_{BUCK})}{f_{SW} \times L} \quad (12)$$

During boost operation, the duty cycle is: D_{BOOST} = 1 – (V_{AC}/V_{BAT}). The inductor ripple current is:

$$I_{RIPPLE_BOOST} = \frac{V_{AC} \times D_{BOOST}}{f_{SW} \times L} \quad (13)$$

Copyright © 2023 Texas Instruments Incorporated

The maximum inductor ripple current happens with D = 0.5 or close to 0.5. Ripple calculations should be analyzed for both forward and reverse operating modes if applicable.

Usually inductor ripple is designed in the range of (20 – 40%) maximum inductor current (in either forward or reverse mode) as a trade-off between inductor size and efficiency for a practical design.

9.2.1.2.5 Input (VAC / SYS) Capacitor

Input capacitor should have enough ripple current rating to absorb input switching ripple current. The worst case RMS ripple current is half of the output when duty cycle is 0.5 in forward buck mode, or reverse boost mode. If the converter does not operate at 50% duty cycle, then the worst case capacitor RMS current occurs where the duty cycle is closest to 50% and can be estimated by Equation 14:

$$I_{CIN} = I_{CHG} \times \sqrt{D \times (1 - D)} \tag{14}$$

A combination of ceramic and bulk capacitors should be used to provide a short path for high di/dt current and to reduce the voltage ripple. Ceramic capacitors should be placed close to the switching half-bridge. Given total bulk input capacitance, it is recommended to distribute equally on either side of R_{AC_SNS}. The complete schematic is a good starting point for input capacitor for typical applications.

9.2.1.2.6 Output (VBAT) Capacitor

In forward boost mode or reverse buck mode, the output capacitor conducts high ripple current. The output capacitor RMS ripple current is given by where the minimum VAC corresponds to the maximum capacitor current.

$$I_{CBAT} = I_{BAT}\sqrt{\frac{V_{BAT}}{V_{AC}} - 1} \tag{15}$$

In this case, the highest ripple occurs with highest V_{BAT} and lowest V_{AC}: $I_{CBAT} = 10A\sqrt{\frac{58V}{40V} - 1} = 6.9A$. A 5-mΩ output capacitor ESR causes an output voltage ripple of 74 mV as given by:

$$\Delta V_{RIPPLE(ESR)} = I_{BAT} \times \frac{V_{BAT}}{V_{AC,min}} \times ESR \tag{16}$$

A 140-µF output capacitor causes a capacitive ripple voltage of 66 mV as given by:

$$\Delta V_{RIPPLE(CBAT)} = I_{BAT} \times \frac{\left(1 - \frac{V_{AC,min}}{V_{BAT}}\right)}{C_{BAT} \times f_{SW}} \tag{17}$$

A combination of ceramic and bulk capacitors should be used to provide low ESR and high ripple current capacity. Ceramic capacitors should be placed close to the switching half-bridge. Given total bulk output capacitance, it is recommended to distribute equally on either side of R_{BAT_SNS}. The complete schematic is a good starting point for C_{BAT} for typical applications.

9.2.1.2.7 Sense Resistor (R_{AC_SNS} and R_{BAT_SNS}) and Current Programming

The battery current sense resistor between SRP and SRN is fixed at 5 mΩ; using a different value is not recommended. The input current sense resistor between ACP and ACN is typically 2 mΩ, but can be increased to achieve better accuracy at lower sensed currents. In USB-PD EPR applications, a 5-mΩ sense resistor is recommended to achieve programmability in 50 mA/step. In addition, if input current limit function is not desired, ACP and ACN may be shorted together. For both of these sense resistors, a filter network is recommended as shown in the Typical Application.

For both the input current and the output current, the limits may be programmed using the I^2C interface or an external programming resistor on ILIM_HIZ and ICHG pins, respectively.

Copyright © 2023 Texas Instruments Incorporated

PARAMETER	FORMULA	VALUE
Input Current Hardware Limit	$R_{ILIM_HIZ} = K_{ILIM}$ / 15 A	3.3 kΩ for 15 A with 2-mΩ R_{AC_SNS}
Input Current Software Limit	IAC_DPM = 12 A	REG06 = 0x0180 (12 A with 2-mΩ R_{AC_SNS})
Charge Current Hardware Limit	$R_{ICHG} = K_{ICHG}$ / 12 A	4.2 kΩ for 15 A with 5-mΩ R_{BAT_SNS}
Charge Current Software Limit	ICHG = 15 A	REG02 = 0x04B0 (15 A)

The default input sense resistor (R_{AC_SNS}) is 2 mΩ, and the register allows for a range of up-to 50-A input current limit. If lower currents are desired, it is possible to use a higher resistor, such as 5 mΩ. In this case, the IAC_DPM register value should be multiplied by a factor of 2/5 to program the correct current. For example, if a 5-mΩ R_{AC_SNS} is used, and the register is programmed to a value of 0x60, the true maximum current across the R_{AC_SNS} will be: 12A * 2/5 = 4.8 A. Similarly, the K_{ILIM} parameter used to set the ILIM_HIZ pull-down resistor should be scaled by 2/5. For example, with a 5-mΩ R_{AC_SNS} resistor, a 6-A current limit would be achieved as: $R_{ILIM} = K_{ILIM}$ * (2/5) / 6A = 3.3 kΩ.

9.2.1.2.8 Power MOSFETs Selection

Four external N-channel MOSFETs are used for a synchronous switching buck-boost battery charger. The gate drivers are integrated into the IC with 5 V of gate drive voltage. An external gate drive voltage can be provided directly into the DRV_SUP pin for increased efficiency.

Figure-of-merit (FOM) is usually used for selecting proper MOSFET based on a tradeoff between the conduction loss and switching loss. For the top side MOSFET, FOM is defined as the product of a MOSFET's on-resistance, $R_{DS(ON)}$, and the gate-to-drain charge, Q_{GD}. For the bottom side MOSFET, FOM is defined as the product of the MOSFET's on-resistance, $R_{DS(ON)}$, and the total gate charge, Q_G.

$$FOM_{top} = R_{DS(on)} \cdot Q_{GD};\ FOM_{bottom} = R_{DS(on)} \cdot Q_G \quad (18)$$

The lower the FOM value, the lower the total power loss. Usually lower $R_{DS(ON)}$ has higher cost with the same package size.

The top-side MOSFET loss includes conduction loss and switching loss. Taking buck mode operation as an example the power loss is a function of duty cycle ($D=V_{OUT}/V_{IN}$), charging current (I_{CHG}), MOSFET's on-resistance ($R_{DS(ON)_top}$), input voltage (V_{IN}), switching frequency (f_S), turn-on time (t_{on}) and turn-off time (t_{off}):

$$P_{top} = P_{con_top} + P_{sw_top} \quad (19)$$

$$P_{con_top} = D \cdot I_{L_RMS}^{\ 2} \cdot R_{DS(on)_top}; \quad (20)$$

$$I_{L_RMS}^{\ 2} = I_{L_DC}^{\ 2} + I_{ripple}^{\ 2}/12 \quad (21)$$

- I_{L_DC} is the average inductor DC current;
- I_{ripple} is the inductor current ripple peak-to-peak value;

$$P_{sw_top} = P_{IV_top} + P_{Qoss_top} + P_{Gate_top}; \quad (22)$$

The first item P_{con_top} represents the conduction loss which is straight forward. The second term P_{sw_top} represents the multiple switching loss items in top MOSFET including voltage and current overlap losses (P_{IV_top}), MOSFET parasitic output capacitance loss (P_{Qoss_top}) and gate drive loss (P_{Gate_top}). To calculate voltage and current overlap losses (P_{IV_top}):

$$P_{IV_top} = 0.5x\ V_{IN} \cdot I_{valley} \cdot t_{on} \cdot f_S + 0.5x\ V_{IN} \cdot I_{peak} \cdot t_{off} \cdot f_S \quad (23)$$

$$I_{valley} = I_{L_DC} - 0.5 \cdot I_{ripple} \text{ (inductor current valley value)}; \quad (24)$$

$$I_{peak} = I_{L_DC} + 0.5 \cdot I_{ripple} \text{ (inductor current peak value)}; \quad (25)$$

- t_{on} is the MOSFET turn-on time that V_{DS} falling time from V_{IN} to almost zero (MOSFET turn on conduction voltage);
- t_{off} is the MOSFET turn-off time that I_{DS} falling time from I_{peak} to zero;

Copyright © 2023 Texas Instruments Incorporated

The MOSFET turn-on and turn-off times are given by:

$$t_{on} = \frac{Q_{SW}}{I_{on}}, \quad t_{off} = \frac{Q_{SW}}{I_{off}} \tag{26}$$

where Q_{sw} is the switching charge, I_{on} is the turn-on gate driving current, and I_{off} is the turn-off gate driving current. If the switching charge is not given in MOSFET datasheet, it can be estimated by gate-to-drain charge (Q_{GD}) and gate-to-source charge (Q_{GS}):

$$Q_{sw} = Q_{GD} + Q_{GS} \tag{27}$$

Gate driving current can be estimated by REGN voltage (V_{REGN}), MOSFET plateau voltage (V_{plt}), total turn-on gate resistance (R_{on}), and turn-off gate resistance (R_{off}) of the gate driver:

$$I_{on} = \frac{V_{REGN} - V_{plt}}{R_{on}}, \quad I_{off} = \frac{V_{plt}}{R_{off}} \tag{28}$$

To calculate top MOSFET parasitic output capacitance loss (P_{Qoss_top}):

$$P_{Qoss_top} = 0.5 \cdot V_{IN} \cdot Q_{oss} \cdot f_S \tag{29}$$

- Q_{oss} is the MOSFET parasitic output charge which can be found in MOSFET datasheet. It is recommended to limit the total switch node capacitance C_{SW} (nF) < 160/VIN; for example, for a 60-V application, it is recommended to keep the total C_{SW} < 2.67 nF

To calculate top MOSFET gate drive loss (P_{Gate_top}):

$$P_{Gate_top} = V_{IN} \cdot Q_{Gate_top} \cdot f_S \tag{30}$$

- Q_{Gate_top} is the top MOSFET gate charge which can be found in MOSFET datasheet;
- Note here V_{IN} is used instead of real gate drive voltage because the gate drive is generated based on LDO from V_{IN}, the total gate drive related loss are all considered when V_{IN} is used for gate drive loss calculation.
- Alternatively, gate drive voltage can be supplied directly by external high efficiency supply into the DRV_SUP pin. In this case, the power loss to drive the gates becomes: $P_{Gate_top} = V_{DRV_SUP} \cdot Q_{Gate_top} \cdot f_S$

The bottom-side MOSFET loss also includes conduction loss and switching loss:

$$P_{bottom} = P_{con_bottom} + P_{sw_bottom} \tag{31}$$

$$P_{con_bottom} = (1 - D) \cdot I_{L_RMS}^{2} \cdot R_{DS(on)_bottom}; \tag{32}$$

$$P_{sw_bottom} = P_{RR_bottom} + P_{Dead_bottom} + P_{Gate_bottom}; \tag{33}$$

The first item P_{con_bottom} represents the conduction loss which is straight forward. The second term P_{sw_bottom} represents the multiple switching loss items in bottom MOSFET including reverse recovery losses (P_{RR_bottom}), Dead time body diode conduction loss (P_{Dead_bottom}) and gate drive loss (P_{Gate_bottom}). The detail calculation can be found below:

$$P_{RR_bottom} = V_{IN} \cdot Q_{rr} \cdot f_S \tag{34}$$

- Q_{rr} is the bottom MOSFET reverse recovery charge which can be found in MOSFET data sheet;

$$P_{Dead_bottom} = V_F \cdot I_{valley} \cdot f_S \cdot t_{dead_rise} + V_F \cdot I_{peak} \cdot f_S \cdot t_{dead_fall} \tag{35}$$

- V_F is the body diode forward conduction voltage drop;
- t_{dead_rise} is the SW rising edge deadtime between top and bottom MOSFETs which is around 45 ns;
- t_{dead_fall} is the SW falling edge deadtime between top and bottom MOSFETs which is around 45 ns;

Copyright © 2023 Texas Instruments Incorporated

P_{Gate_bottom} can follow the same method as top MOSFET gate drive loss calculation approach.

Power-path FETs for providing power to SYS from either VAC or VBAT are selected as N-channel MOSFETs. The gate drivers are integrated into the IC with 10 V of gate drive voltage; however, the gate drive voltage can be reduced to 7 V using the PWRPATH_REDUCE_VDRV register bit if desired.

9.2.1.2.9 ACFETs and BATFETs Selection

Four external N-channel MOSFETs are used for power path transfer. Two on the VAC side called ACFETs and two on the VBAT side called BATFETs.

The proper trade off for selecting these MOSFETs depends on the SOA characteristics. All four FETs follow the same trend hence the same FET can be used at all four places. It is essential to select a MOSFET that offers close to 10A Drain Current at 30V V_{DS} at DC and also has the capability to offer 100A Drain Current at 30V V_{DS} at 10 µs without breaking. Furthermore, the SOA characteristics should be such that the maximum junction temperature should be at least 125°C. The FETs selected for this application are AONS6276 and can withstand a voltage swing of up-to 30V from VAC to VBAT and vice-versa.

9.2.1.2.10 Converter Fast Transient Response

The device integrates all the loop compensation, thereby providing a high density solution with ease of use. For faster transient reponse in reverse operating mode, the EN_CONV_FAST_TRANSIENT bit can be set to 1. If device is not used in reverse boost mode operation, this section can be disregarded.

When the converter is operating in boost mode, the non-continuous inductor current flow to the load results in a right-half plane (RHP) zero. The RHP zero location is:

$$RHPz = \frac{V_{IN,boost}}{I_{IN,boost}} \frac{1}{2\pi L} \tag{36}$$

For good phase margin, the unity gain bandwidth (UGBW) of the converter should be about 1/3 of the RHPz. The boost output capacitor (C_{load}), and the converter transient parameters (R_1, gm_1) need to be scaled to move the location of the UGBW of the converter.

$$1 \approx \frac{Adiv \times gm_1(sR_1C_1+1)}{sC_1}\left[\frac{V_i}{I_o \times 50m}\right]\left[\frac{1}{1+s\frac{C_{load}R_{load}}{2}}\right] \tag{37}$$

The device adjusts *Adiv*, gm_1 and R_1 based on the output voltage and the EN_CONV_FAST_TRANSIENT bit setting per the table below. During some boost case scenarios, the C_{load} needs to be adjusted to limit the converter bandwidth.

BOOST OUTPUT VOLTAGE	*Adiv*	C_1	EN_CONV_FAST_TRANSIENT = 0		EN_CONV_FAST_TRANSIENT = 1	
			gm_1	R_1	gm_1	R_1
≤8 V	1/5	75 pF	0.4 µ	600 kΩ	2 µ	1.3 MΩ
8 V to 16 V	1/10	75 pF	0.47 µ	1 MΩ	2 µ	1.8 MΩ
16 V to 32 V	1/20	75 pF	0.67 µ	2.8 MΩ	2 µ	2.8 MΩ
>32 V	1/40	75 pF	2 µ	2.8 MΩ	2 µ	2.8 MΩ

As an example, assume the device operates in reverse boost mode from a 5V supply to provide a 7V boost output voltage with load up-to 5A and 10µH inductor. The RHPz is approximately located at:

$$RHPz = \frac{V_{IN,boost}}{I_{IN,boost}} \frac{1}{2\pi L} = 11.4kHz \tag{38}$$

For best stability, the UGBW of the converter should be limited to 1/3 of the RHP zero, or 3.8kHz. If EN_CONV_FAST_TRANSIENT = 1, the equation becomes:

Copyright © 2023 Texas Instruments Incorporated

$$1 \approx \frac{0.2 \times 2\mu\,(j\omega \times 1.3M\Omega \times 75pF + 1)}{j\omega \times 75pF}\left[\frac{5V}{5A \times 50m}\right]\left[\frac{1}{1 + j\omega\frac{C_{load} \times 1.4}{2}}\right] \quad (39)$$

Solving the above for C_{load} gives ≥674 µF capacitor requirement.

Conversely, if EN_CONV_FAST_TRANSIENT = 0, the UGBW equation becomes:

$$1 \approx \frac{0.2 \times 0.4\mu\,(j\omega \times 0.6M\Omega \times 75pF + 1)}{j\omega \times 75pF}\left[\frac{5V}{5A \times 50m}\right]\left[\frac{1}{1 + j\omega\frac{C_{load} \times 1.4}{2}}\right] \quad (40)$$

Solving the above for C_{load} gives ≥51 µF capacitor requirement. However, the minimum recommended capacitor for converter stability is 80 µF, so this minimum value should be used.

Copyright © 2023 Texas Instruments Incorporated

9.2.1.3 Application Curves

C_{VAC} = 160 µF, C_{OUT} = 160 µF, V_{VAC} = 20 V, V_{BAT} = 29.4 V (unless otherwise specified)

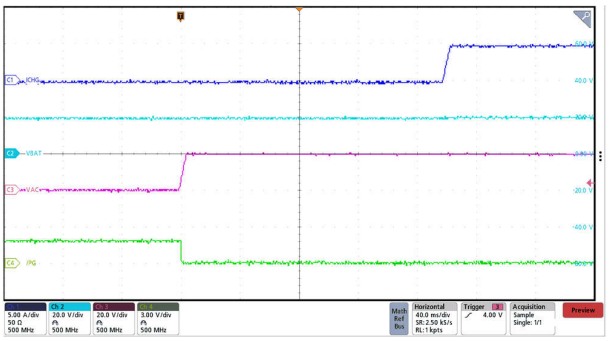

VAC = 20 V VBAT = 20 V ICHG = 5 A

Figure 9-3. VAC Plug-In Power Up with 5-A ICHG

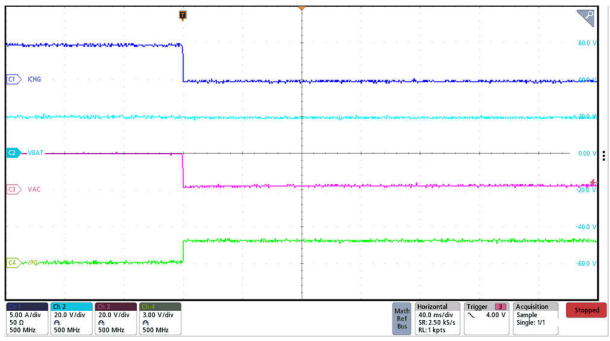

VAC = 20 V → 0 V VBAT = 20 V ICHG = 5 A

Figure 9-4. VAC Un-plug Power Down with 5-A ICHG

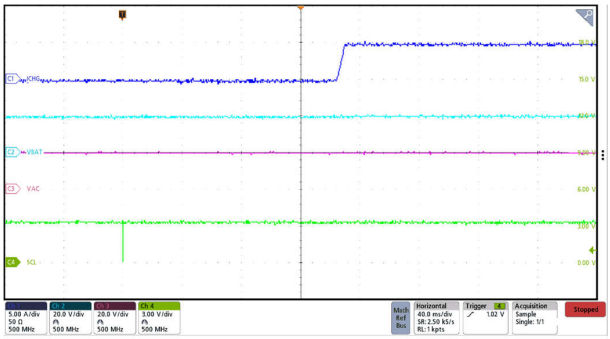

VAC = 20 V VBAT = 24 V ICHG = 5 A

Figure 9-5. Charge Enable via I²C with 5-A ICHG

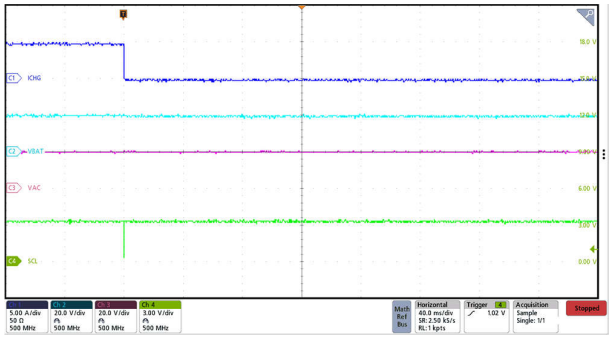

VAC = 20 V VBAT = 24 V ICHG = 5 A

Figure 9-6. Charge Disable via I²C with 5-A ICHG

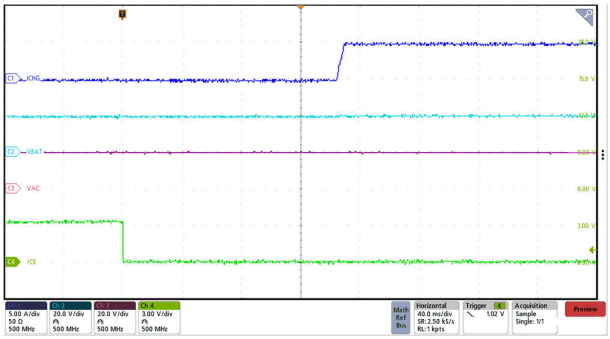

VAC = 20 V VBAT = 24 V ICHG = 5 A

Figure 9-7. Charge Enable via $\overline{CE}$ Pin with 5-A ICHG

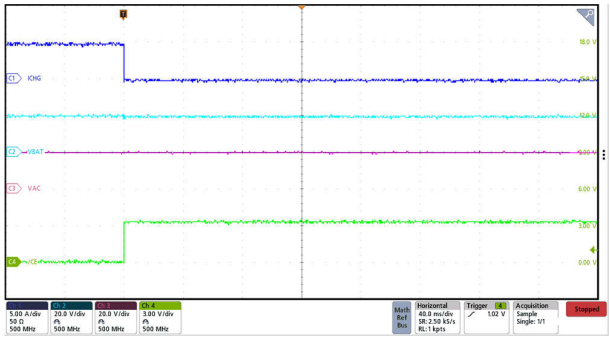

VAC = 20 V VBAT = 24 V ICHG = 5 A

Figure 9-8. Charge Disable via $\overline{CE}$ Pin with 5-A ICHG

Copyright © 2023 Texas Instruments Incorporated

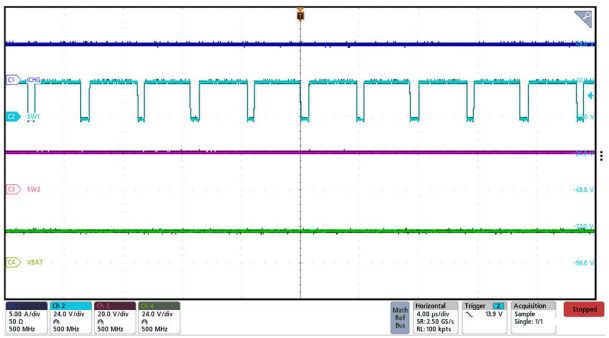

VAC = 24 V VBAT = 20 V ICHG = 5 A

Figure 9-9. Buck Switching Waveform

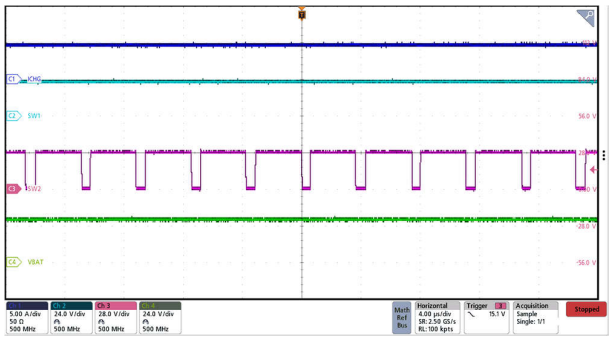

VAC = 24 V VOUT = 28 V ICHG = 5 A

Figure 9-10. Boost Switching Waveform

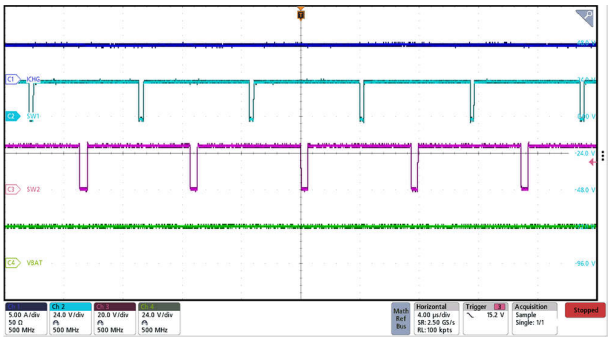

VAC = 24 V VBAT = 24 V ICHG = 5 A

Figure 9-11. Buck-Boost Switching Waveform

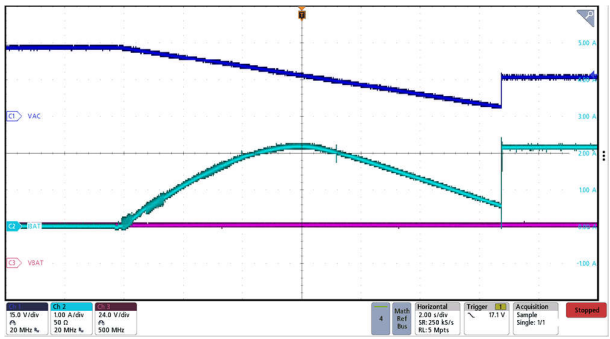

V_{OC} = 30 V VBAT = 24 V EN_CHG = 0 → 1
I_{SC} = 3.5 A

Figure 9-12. Max Power Point Tracking (MPPT) Full Panel Sweep

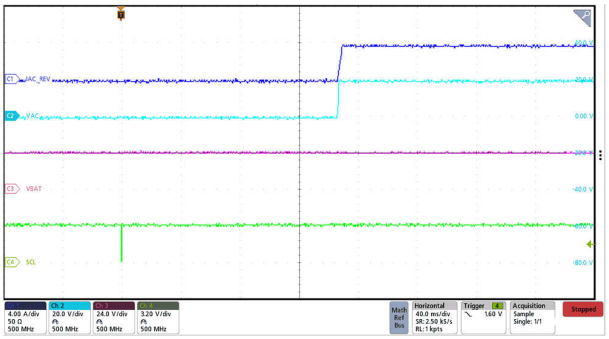

VBAT = 24 V VAC_REV = 20 V ILOAD = 4 A

Figure 9-13. Reverse Mode Power Up with 4-A Load

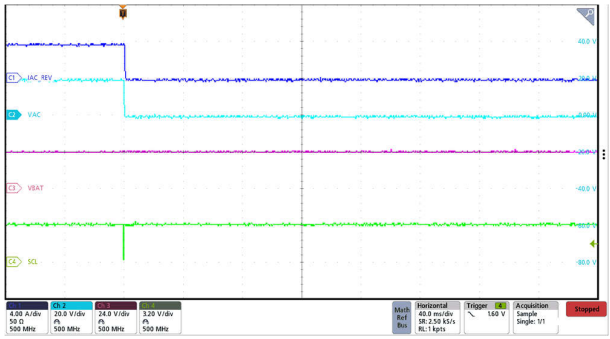

VBAT = 24 V VAC_REV = 20 V ILOAD = 4 A

Figure 9-14. Reverse Mode Power Down with 4-A Load

Copyright © 2023 Texas Instruments Incorporated

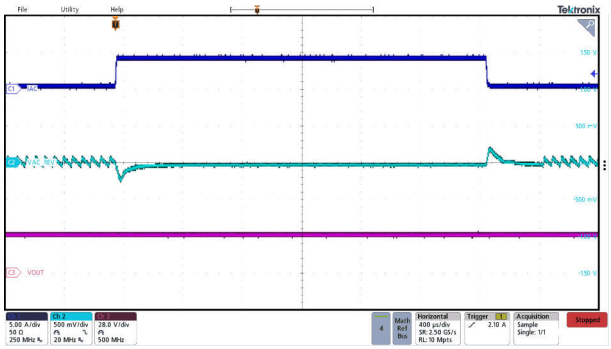

VBAT = 28 V VAC_REV = 5 V ILOAD = 0.5 A → 4.5 A

Figure 9-15. Reverse Mode Buck Transient Reponse

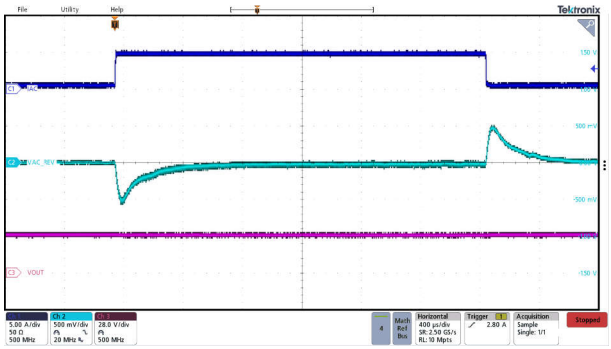

VBAT = 28 V VAC_REV = 28 V ILOAD = 0.5 A → 4.5 A

Figure 9-16. Reverse Mode Buck-Boost Transient Reponse

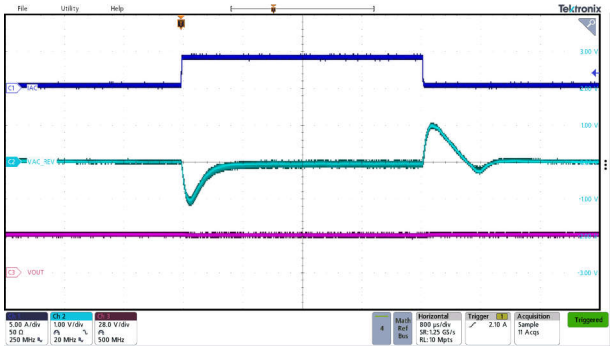

VBAT = 28 V VAC_REV = 48 V ILOAD = 0.5 A → 4.5 A

Figure 9-17. Reverse Mode Boost Transient Reponse

Copyright © 2023 Texas Instruments Incorporated

10 Power Supply Recommendations

The power supply for the device is any DC voltage source within the specified input range. The supply should also be capable of supplying sufficient current based on the programmed input current limit. The input supply should be bypassed with a combination of electrolytic and ceramic capacitors to avoid ringing due to the parasitic impedance of the connecting cables.

When device is operating in the reverse direction, the supply at the OUTPUT should follow the same recommendations as the input supply mentioned above.

Copyright © 2023 Texas Instruments Incorporated

11 Layout

11.1 Layout Guidelines

Proper layout of the components to minimize high frequency current path loops is important to prevent electrical and magnetic field radiation and high frequency resonant problems. Here is a PCB layout priority list for proper layout.

Table 11-1. PCB Layout Guidelines

COMPONENTS	FUNCTION	IMPACT	GUIDELINES
Buck high side FET, Buck low side FET, input capacitors	Buck input loop	High frequency noise, ripple, efficiency	This path forms a high frequency switching loop due to the pulsating current at the input of the buck. Place components on the same side of the board. Minimize loop area to reduce parasitic inductance. Maximize trace width to reduce parasitic resistance. Place input ceramic capacitors close to the switching FETs.
Boost low side FET, boost high side FET, output capacitors	Boost output loop	High frequency noise, ripple, efficiency	This path forms a high frequency switching loop due to the pulsating current at the output of the boost. Place components on the same side of the board. Minimize loop area to reduce parasitic inductance. Maximize trace width to reduce parasitic resistance. Place output ceramic capacitors close to the switching FETs.
Sense resistors, switching FETs, inductor	Current path	Efficiency	The current path from input to output through the power stage and sense resistors has low impedance. Pay attention to via resistance if they are not on the same side. The number of vias can be estimated as 1- to 2-A per via for a 10-mil via with 1 oz. copper thickness.
Switching FETs, inductor	Power stage	Thermal, efficiency	The switching FETs and inductor are the components with highest power loss. Allow enough copper area for heat dissipation. Multiple thermal vias can be used to connect more copper layers together and dissipate more heat.
DRV_SUP, BTST1, BTST2 capacitors	Switching FET gate drive	High frequency noise, parasitic ringing, gate drive integrity	The DRV_SUP capacitor is used to supply the power to drive the low side FETs. The BTST capacitors are used to drive the high side FETs. It is recommended to place the capacitors as close as possible to the IC.
LODRV1, LODRV2	Low side gate drive	High frequency noise, parasitic ringing, gate drive integrity	LODRV1 and LODRV2 supplies the gate drive current to turn on the low side FETs. The return of LODRV1 and LODRV2 is PGND. As current take the path of least impedance, a ground plane close to the low side gate drive traces is recommended. Minimize gate drive length and aim for at least 20-mil gate drive trace width.
HIDRV1, HIDRV2, SW1 (pin trace), SW2 (pin trace)	High side gate drive	High frequency noise, parasitic ringing, gate drive integrity	HIDRV1 and HIDRV2 supplies the gate drive current to turn on the high side FETs. The return of HIDRV1 and HIDRV2 are SW1 and SW2, respectively. Route HIDRV1/SW1 and HIDRV2/SW2 pair next to each other to reduce gate drive parasitic inductance. Minimize gate drive length and aim for at least 20-mil gate drive trace width.

Copyright © 2023 Texas Instruments Incorporated

Table 11-1. PCB Layout Guidelines (continued)

COMPONENTS	FUNCTION	IMPACT	GUIDELINES
Current limit resistors, FSW_SYNC resistor	IC programmable settings	Regulation accuracy, switching integrity	Pin voltage determines the settings for input current limit, output current limit and switching frequency. Ground noise on these could lead to inacuracy. Minimize ground return from these resistors to the IC ground pin.
Input (ACP, ACN) and output (SRP, SRN) current sense	Current regulation	Regulation accuracy	Use Kelvin-sensing technique for input and output current sense resistors. Connect the current sense traces to the center of the pads, and run current sense traces as differential pairs, away from switching nodes.
Input (ACUV), and output (FB, VO_SNS) voltage sensing	Voltage sense and regulation	Regulation accuracy	ACUV divider sets internal input voltage regulation in forward mode (V_{ACUV_DPM}). FB divider sets battery voltage regulation in forward mode (V_{FB_ACC}). Route the top of the divider point to the target regulation location. Avoid routing close to high power switching nodes.
Bypass capacitors	Noise filter	Noise immunity	Place lowest value capacitors closest to the IC.

11.2 Layout Example

Based on the above layout guidelines, the buck-boost PCB layout example top view is shown below including all the key power components.

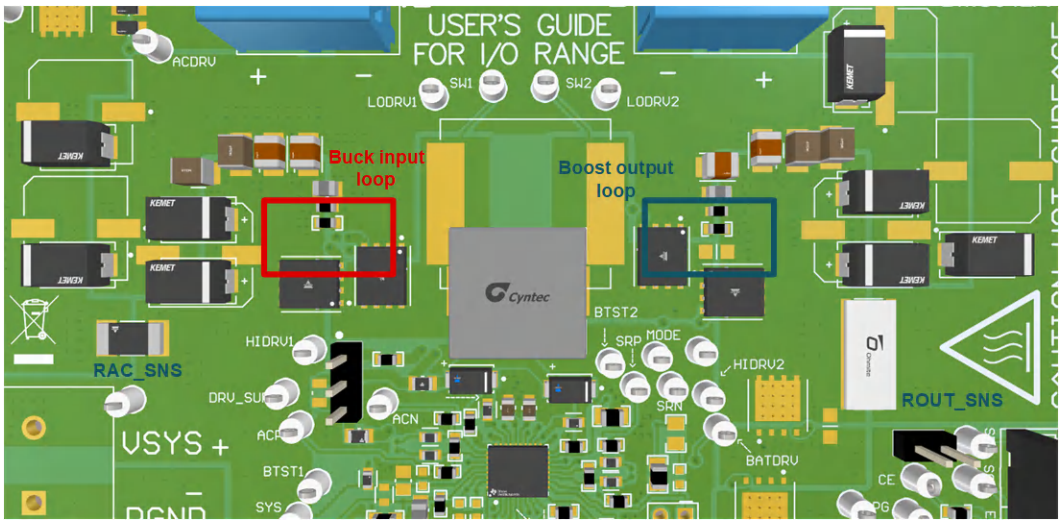

Figure 11-1. PCB Layout Reference Example Top View

For both input and output current sensing resistors, differential sensing and routing method are suggested and highlighted in figure below. Use wide trace for gate drive traces, minimum 20-mil trace width. Connect all analog grounds to a dedicated low-impedance copper plane, which is tied to the power ground underneath the IC exposed pad.

Copyright © 2023 Texas Instruments Incorporated

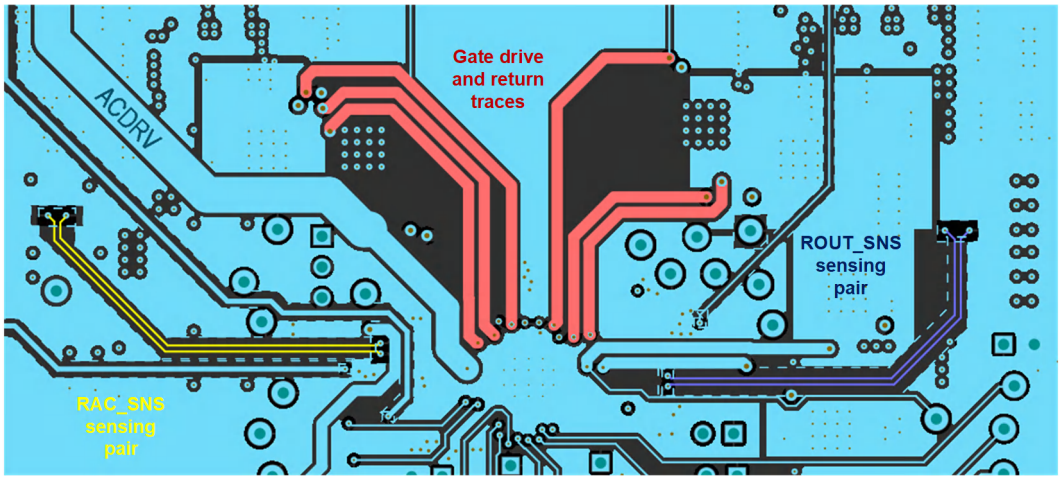

Figure 11-2. PCB Layout Gate Drive and Current Sensing Signal Layer Routing

Copyright © 2023 Texas Instruments Incorporated

12 Device and Documentation Support

12.1 Device Support

12.1.1 Third-Party Products Disclaimer

TI'S PUBLICATION OF INFORMATION REGARDING THIRD-PARTY PRODUCTS OR SERVICES DOES NOT CONSTITUTE AN ENDORSEMENT REGARDING THE SUITABILITY OF SUCH PRODUCTS OR SERVICES OR A WARRANTY, REPRESENTATION OR ENDORSEMENT OF SUCH PRODUCTS OR SERVICES, EITHER ALONE OR IN COMBINATION WITH ANY TI PRODUCT OR SERVICE.

12.2 Receiving Notification of Documentation Updates

To receive notification of documentation updates, navigate to the device product folder on ti.com. Click on *Notifications* to register and receive a weekly digest of any product information that has changed. For change details, review the revision history included in any revised document.

12.3 Support Resources

TI E2E™ support forums are an engineer's go-to source for fast, verified answers and design help — straight from the experts. Search existing answers or ask your own question to get the quick design help you need.

Linked content is provided "AS IS" by the respective contributors. They do not constitute TI specifications and do not necessarily reflect TI's views; see TI's Terms of Use.

12.4 Trademarks

TI E2E™ is a trademark of Texas Instruments.
All trademarks are the property of their respective owners.

12.5 Electrostatic Discharge Caution



This integrated circuit can be damaged by ESD. Texas Instruments recommends that all integrated circuits be handled with appropriate precautions. Failure to observe proper handling and installation procedures can cause damage.

ESD damage can range from subtle performance degradation to complete device failure. Precision integrated circuits may be more susceptible to damage because very small parametric changes could cause the device not to meet its published specifications.

12.6 Glossary

TI Glossary	This glossary lists and explains terms, acronyms, and definitions.

13 Revision History

DATE	REVISION	NOTES
December 2023	*	Initial release

Copyright © 2023 Texas Instruments Incorporated

14 Mechanical, Packaging, and Orderable Information

The following pages include mechanical, packaging, and orderable information. This information is the most current data available for the designated devices. This data is subject to change without notice and revision of this document. For browser-based versions of this data sheet, refer to the left-hand navigation.

Copyright © 2023 Texas Instruments Incorporated

PACKAGING INFORMATION

Orderable part number	Status (1)	Material type (2)	Package | Pins	Package qty | Carrier	RoHS (3)	Lead finish/ Ball material (4)	MSL rating/ Peak reflow (5)	Op temp (°C)	Part marking (6)
BQ25750RRVR	Active	Production	VQFN (RRV) | 36	3000 | LARGE T&R	Yes	NIPDAU	Level-1-260C-UNLIM	-40 to 125	BQ25750
BQ25750RRVR.A	Active	Production	VQFN (RRV) | 36	3000 | LARGE T&R	Yes	NIPDAU	Level-1-260C-UNLIM	-40 to 125	BQ25750

(1) **Status:** For more details on status, see our product life cycle.

(2) **Material type:** When designated, preproduction parts are prototypes/experimental devices, and are not yet approved or released for full production. Testing and final process, including without limitation quality assurance, reliability performance testing, and/or process qualification, may not yet be complete, and this item is subject to further changes or possible discontinuation. If available for ordering, purchases will be subject to an additional waiver at checkout, and are intended for early internal evaluation purposes only. These items are sold without warranties of any kind.

(3) **RoHS values:** Yes, No, RoHS Exempt. See the TI RoHS Statement for additional information and value definition.

(4) **Lead finish/Ball material:** Parts may have multiple material finish options. Finish options are separated by a vertical ruled line. Lead finish/Ball material values may wrap to two lines if the finish value exceeds the maximum column width.

(5) **MSL rating/Peak reflow:** The moisture sensitivity level ratings and peak solder (reflow) temperatures. In the event that a part has multiple moisture sensitivity ratings, only the lowest level per JEDEC standards is shown. Refer to the shipping label for the actual reflow temperature that will be used to mount the part to the printed circuit board.

(6) **Part marking:** There may be an additional marking, which relates to the logo, the lot trace code information, or the environmental category of the part.

Multiple part markings will be inside parentheses. Only one part marking contained in parentheses and separated by a "~" will appear on a part. If a line is indented then it is a continuation of the previous line and the two combined represent the entire part marking for that device.

Important Information and Disclaimer: The information provided on this page represents TI's knowledge and belief as of the date that it is provided. TI bases its knowledge and belief on information provided by third parties, and makes no representation or warranty as to the accuracy of such information. Efforts are underway to better integrate information from third parties. TI has taken and continues to take reasonable steps to provide representative and accurate information but may not have conducted destructive testing or chemical analysis on incoming materials and chemicals. TI and TI suppliers consider certain information to be proprietary, and thus CAS numbers and other limited information may not be available for release.

In no event shall TI's liability arising out of such information exceed the total purchase price of the TI part(s) at issue in this document sold by TI to Customer on an annual basis.

TAPE AND REEL INFORMATION

REEL DIMENSIONS

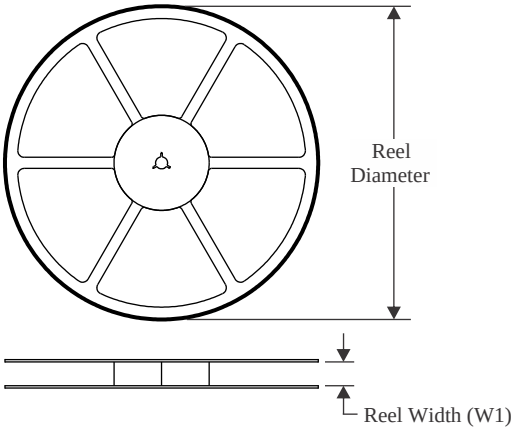

TAPE DIMENSIONS

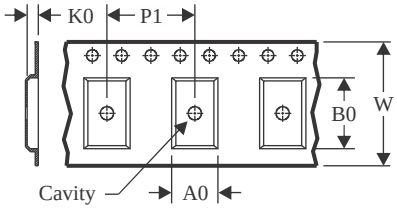

A0	Dimension designed to accommodate the component width
B0	Dimension designed to accommodate the component length
K0	Dimension designed to accommodate the component thickness
W	Overall width of the carrier tape
P1	Pitch between successive cavity centers

QUADRANT ASSIGNMENTS FOR PIN 1 ORIENTATION IN TAPE

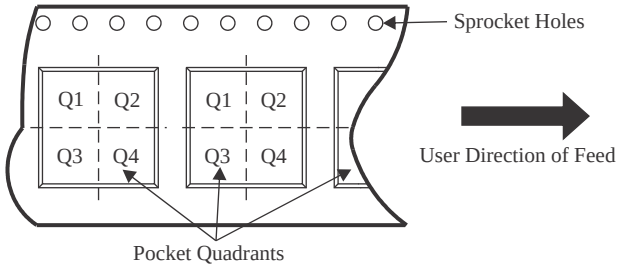

*All dimensions are nominal

Device	Package Type	Package Drawing	Pins	SPQ	Reel Diameter (mm)	Reel Width W1 (mm)	A0 (mm)	B0 (mm)	K0 (mm)	P1 (mm)	W (mm)	Pin1 Quadrant
BQ25750RRVR	VQFN	RRV	36	3000	330.0	12.4	5.3	6.3	1.15	8.0	12.0	Q1

TAPE AND REEL BOX DIMENSIONS

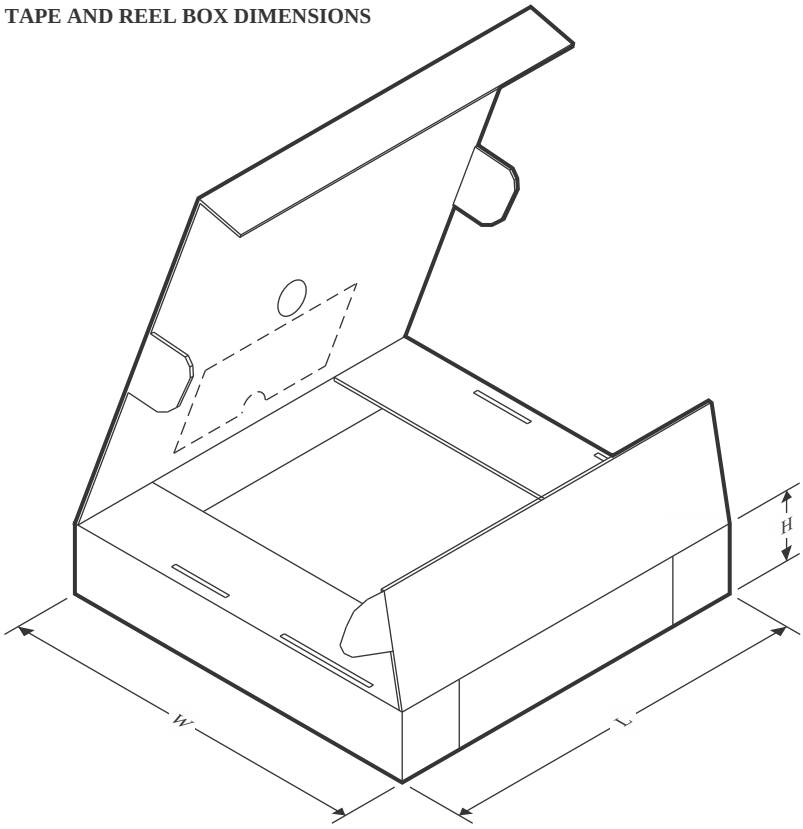

*All dimensions are nominal

Device	Package Type	Package Drawing	Pins	SPQ	Length (mm)	Width (mm)	Height (mm)
BQ25750RRVR	VQFN	RRV	36	3000	367.0	367.0	35.0

GENERIC PACKAGE VIEW

RRV 36

VQFN - 1 mm max height

5 x 6, 0.5 mm pitch

PLASTIC QUAD FLATPACK - NO LEAD

This image is a representation of the package family, actual package may vary.
Refer to the product data sheet for package details.

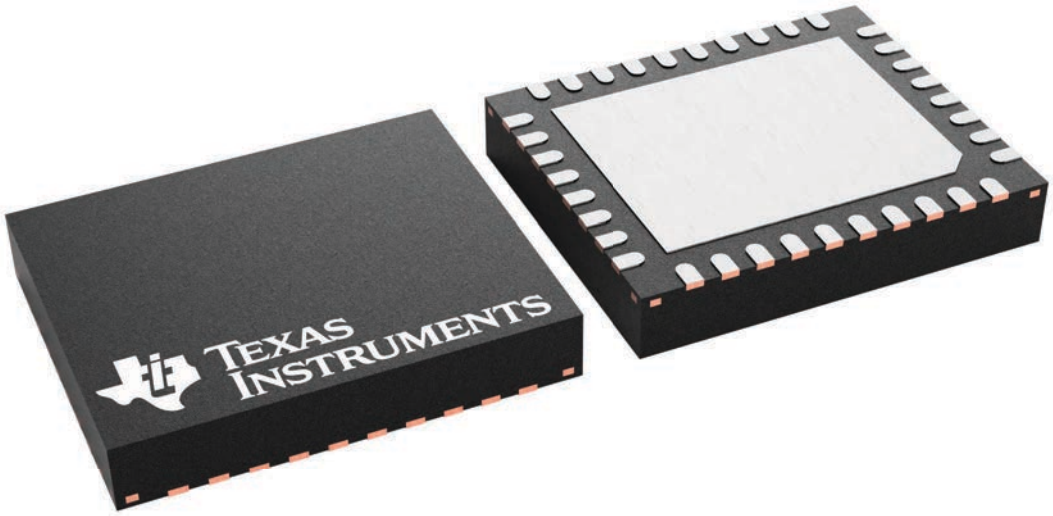

4229484/A

PACKAGE OUTLINE

RRV0036A

VQFN - 1 mm max height

PLASTIC QUAD FLATPACK-NO LEAD

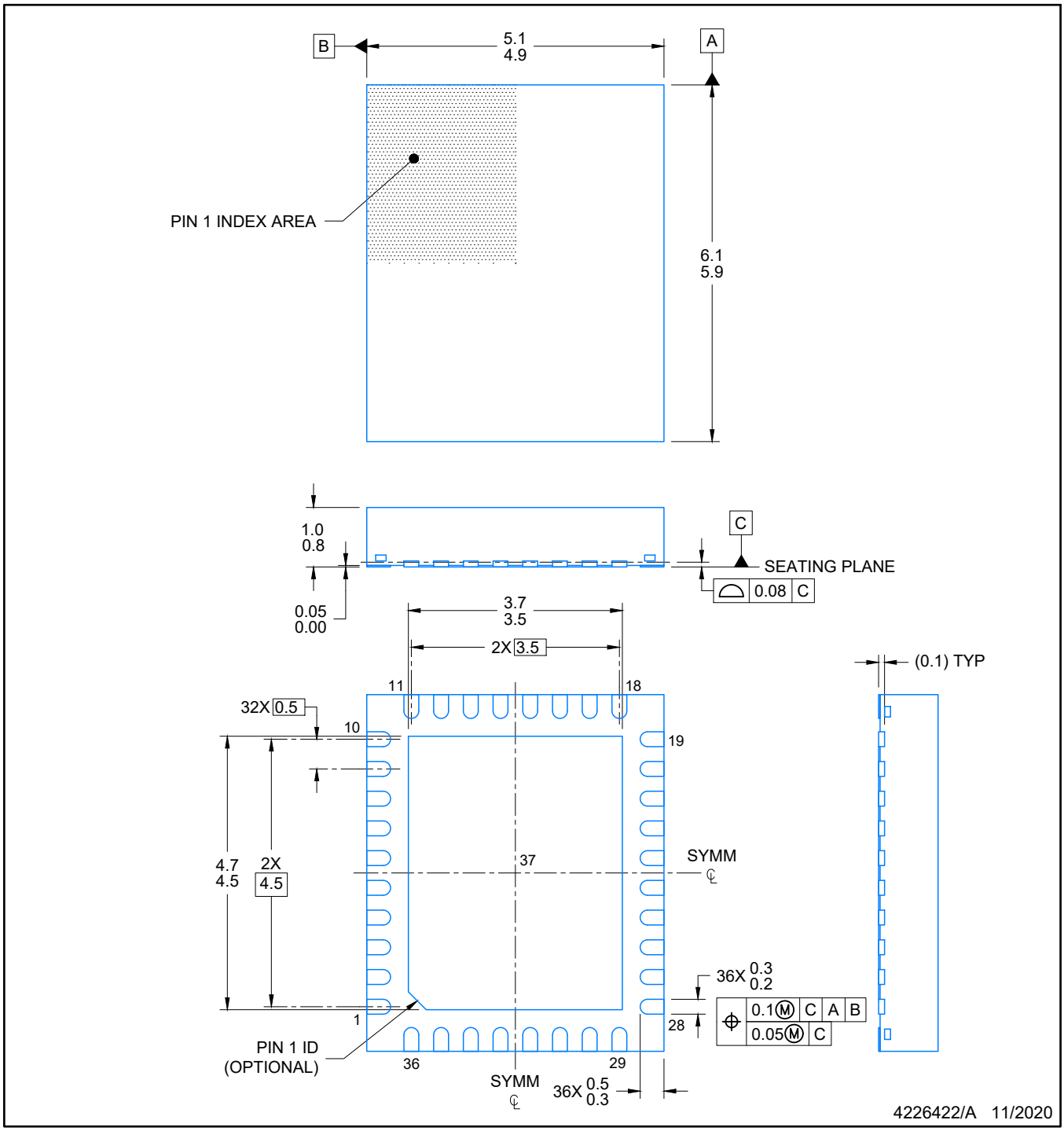

NOTES:

1. All linear dimensions are in millimeters. Any dimensions in parenthesis are for reference only. Dimensioning and tolerancing per ASME Y14.5M.
2. This drawing is subject to change without notice.
3. The package thermal pad must be soldered to the printed circuit board for optimal thermal and mechanical performance.

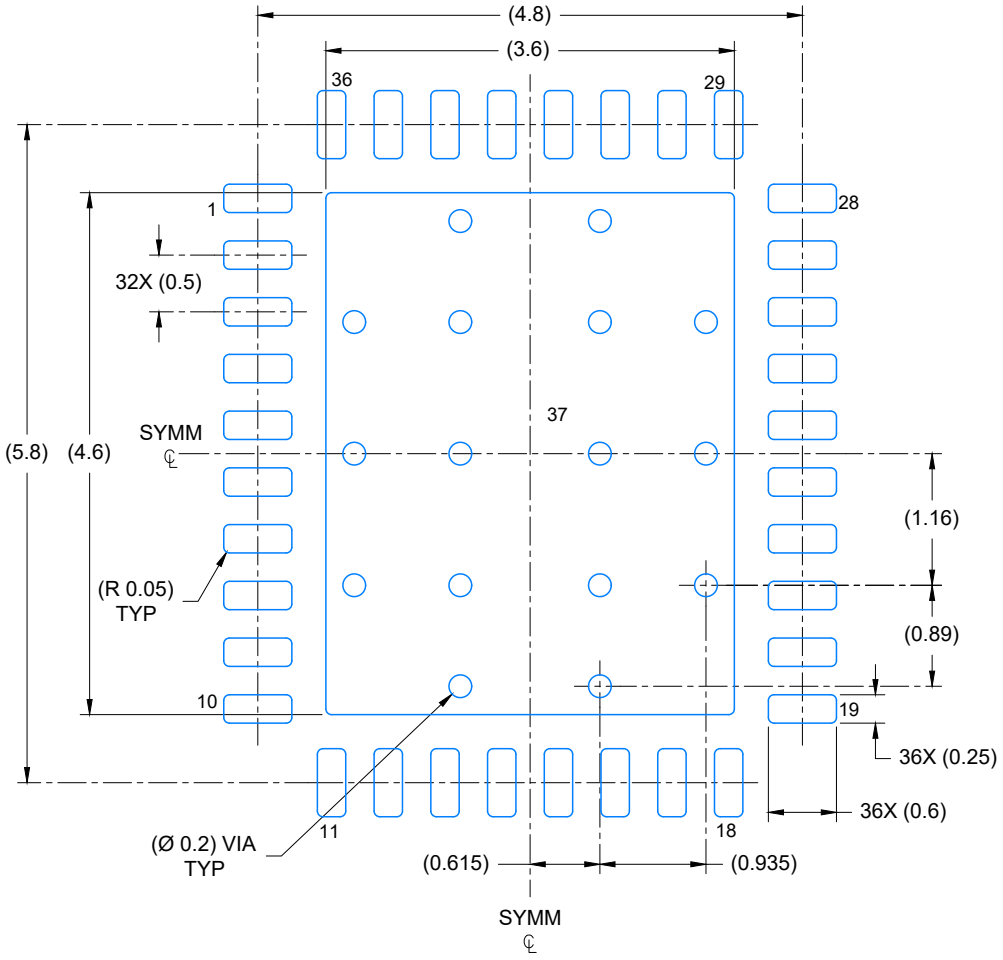

LAND PATTERN EXAMPLE
EXPOSED METAL SHOWN
SCALE: 15X

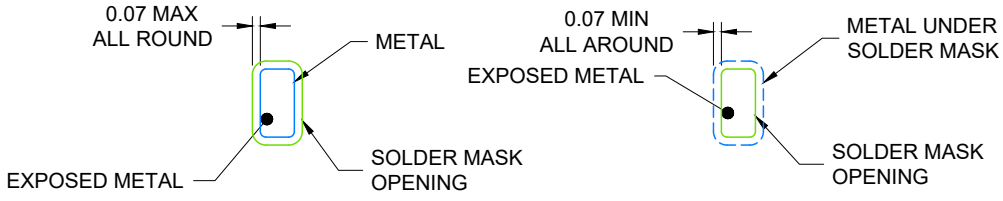

NON- SOLDER MASK DEFINED (PREFERRED)

SOLDER MASK DEFINED

SOLDER MASK DETAILS

4226422/A 11/2020

NOTES: (continued)

4. This package is designed to be soldered to a thermal pad on the board. For more information, see Texas Instruments literature number SLUA271 (www.ti.com/lit/slua271) .
5. Vias are optional depending on application, refer to device data sheet. If any vias are implemented, refer to their locations shown on this view. It is recommended that vias under paste be filled, plugged or tented.

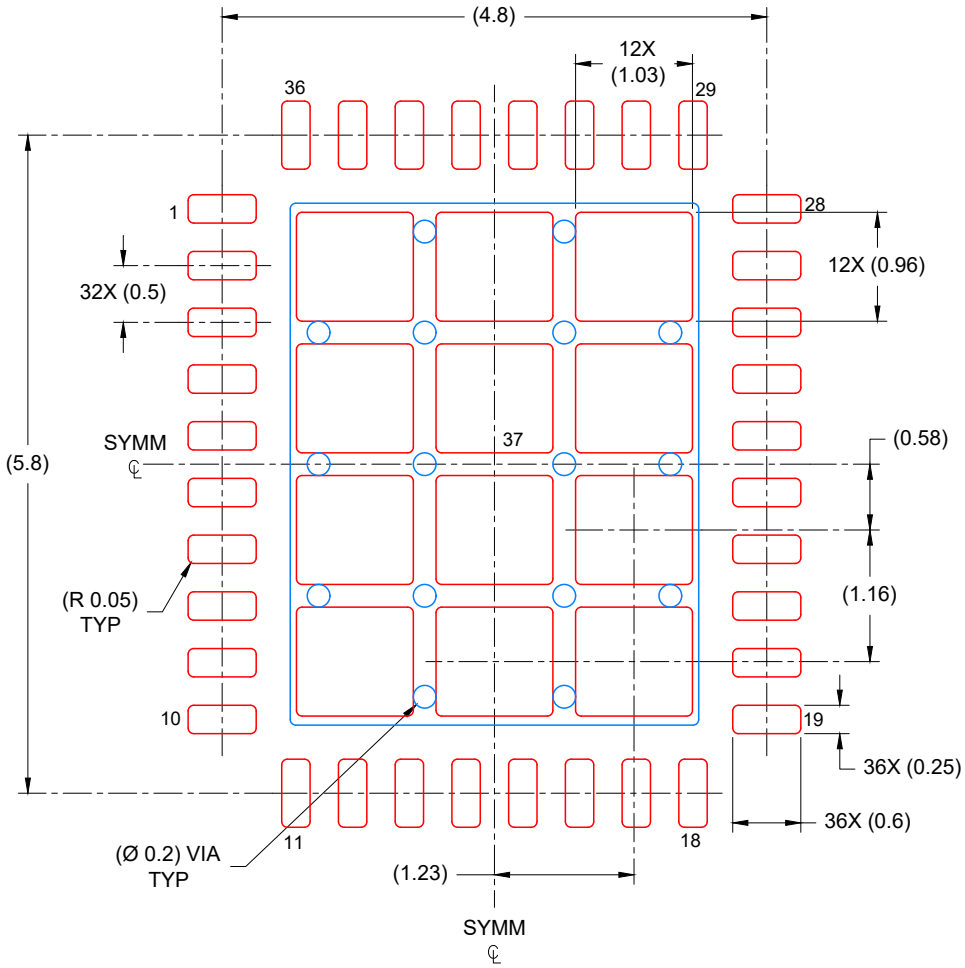

SOLDER PASTE EXAMPLE
BASED ON 0.125 mm THICK STENCIL

EXPOSED PAD
72% PRINTED COVERAGE BY AREA
SCALE: 15X

4226422/A 11/2020

NOTES: (continued)

6. Laser cutting apertures with trapezoidal walls and rounded corners may offer better paste release. IPC-7525 may have alternate design recommendations.